PRESIDENT

JAMES

MAINTENANCE MANUAL

COMMERCIAL CHARACTERISTICS

GENERAL:

Frequency Band:	26,965 MHz to 27,405 MHz
Number of channels:	40
Difference between channels:	10 KHz
Emission class:	A3E (AM),F3E (FM)
Power supply:	13,2 V (10,8 V to 15,6 V)
Temperature margin:	- 10° C to + 55 ° C
Antenna impedance:	50 Ohms

EMITTER:

Frequency difference:	less than +/- 600 Hz + 0,002 %
Output power:	4 W peak
Microphone impedance:	500 Ohms
Output power in adjacent channel:	less than 20 microwatts.

RECEIVER:

First I.F.:	10,695 MHz
Second I.F.:	455 KHz
Impedance of incorporated microphone:	8 Ohms
L.F. output power:	2W
Sensitivity:	better than 12 dB/microvolt

GENERAL USE

Phase locked-loop Circuit (PLL)

The PLL circuit consists essentially of:
- the voltage controlled oscillator (VCO) by the transistors Q403, Q402 and Q401
- the charge pump circuit Q405, Q406
- the integrated circuit IC401 which contains the reference frequency, the programmable generated frequency divider and the phase comparator.

The information necessary for the working of the integrated circuit is sent in series by the micro controller IC701.

The output signal of this oscillator is the frequency 38,100 MHz for channel 40 in emission mode.

The frequency difference between the two modes (reception and emission) is obtained by switching the coil L403.

EMITTER:
In AM the low frequency signal is preamplified by IC605, then amplified by IC201 and enters into the modulation transformer T201. This amplified low frequency signal is applied to the high frequency power supply stage Q502, Q501 by their collector so that the high frequency is modulated.

In FM the low frequency signal is limited and filtered by the stage IC606, D604 is applied to the diode Varicap D406 via the adjustable resistance VR400.

The signal delivered by the frequency modulated VCO by this low frequency signal, will be applied to the power supply stage which consists of the transistors Q201, Q502 et Q501.

In AM/FM, the amplified signal will be filtered before being sent to the antenna socket JK425.

RECEIVER:
The VCO signal is used as a first local oscillator. The mixing with the received frequency is carried out by the stage L7, D7, L8 which gives a first I.F. of 10,695 MHz. The signal reference of the PLL at 10,240 MHz is used as a second local oscillator by Q12 to obtain a second I.F. at 455 KHz.

In AM, the latter will be applied to the AM detector stage, composed of D12, and commanded by Q17.

In FM, the latter will be applied to the FM detector stage, composed of the integrated circuit IC1 (discriminator) and its loading coil L21.

In AM/FM, the low frequency signal is then applied to the transistor Q21, low frequency preamplifier and then to the low frequency amplifier IC 407 via the volume potentiometer.

ALIGNEMENT OF THE SYNTHESISER

1. Alignement Procedure

0	Channel 20, C band Reception in AM	L404	Frequency meter on pin 1 of the IC 401. Adjust L404 so as to obtain 10.240 MHz ± 10 Hz
1	Channel 20, C band Reception in AM	L402	Connect the continued voltmeter to the point TP1 R423. Adjust L402 so as to obtain 2,8 V ±0,1
2	* Channel 40, F band Channel 1, A band		Check on TP1-R423 that: -4,3 V ± 0,1 channel 40 F band 1,8 V ± 0,1 channel 1 A band
3	Channel 20, C band emission in AM	L403 TX 3V	Connect the TP1 voltmeter on R423. Adjust L403 so as to obtain 2,7 V ± 0,1.
4	* Channel 40, F band Channel 1, A band	TX 5,2V TX 1,9V	Check on TP1-R423 that: 4,8 V ± 0,1 channel 40 F band 1,5 V ± 0,1 channel 1 A band
5	Channel 20, C band Reception in AM	L401	Connect the frequency meter to Pin 8 of the IC 401 so as to obtain 37.900 MHz.

* This check to be established on "Export Model" equipment only.

ALIGNEMENT OF THE RECEIVER

1	Channel 20, band C AM modulated 1 KHz 60% Level 1µV = -107 dBm	L2, L11, L12, L13, L16,L17, L18	Connect the HF voltmeter or an oscilloscope to the loud speaker. Readjust the coils in the given order so as to obtain a maximum reading.
2	Same as 1 except FM	L21	Readjust to obtain a maximum reading.
3	Same as 1 AM Level 100 µV	VR2	Adjust so as to bring the LED to 9 in the display, position RF.
4	Same as 3	VR3	Connect an external V.U. meter. Adjust VR3 so as to obtain S.9. on the V.U-meter.
5	Channel 20 AM Maximum squelch Level 1000 µV Modulated 1 KHz	VR1	Adjust VR1 so as to readjust the low frequency signals.

ALIGNEMENT OF THE EMITTER

1	* Channel 20 AM emission Without modulation	VR406	Adjust VR 406 so as to obtain 4 W on the wattmeter (French model), 12 W (Export model).
2	Channel 20 AM emission Without modulation	VR401	Adjust VR401 so that the V.U.-meter indicator is at S9, position RF.
3	Channel 20 AM emission Modulation 1 KHz Level 10mV	VR201	Adjust VR201 to obtain 90% modulation.
4	* Same as 3 except FM	VR405	Adjust VR405 to get a watt meter reading of 4 W (French model), 15 W (Export model) .
5	Channel 20 AM FM emission Modulation 1 KHz Level 10 mV		Adjust VR400 so as to obtain an FM excursion of 1,5.

* Measurement for "Export Model" equipment only

B001
PA - 352
BOTTOM VIEW
2/2

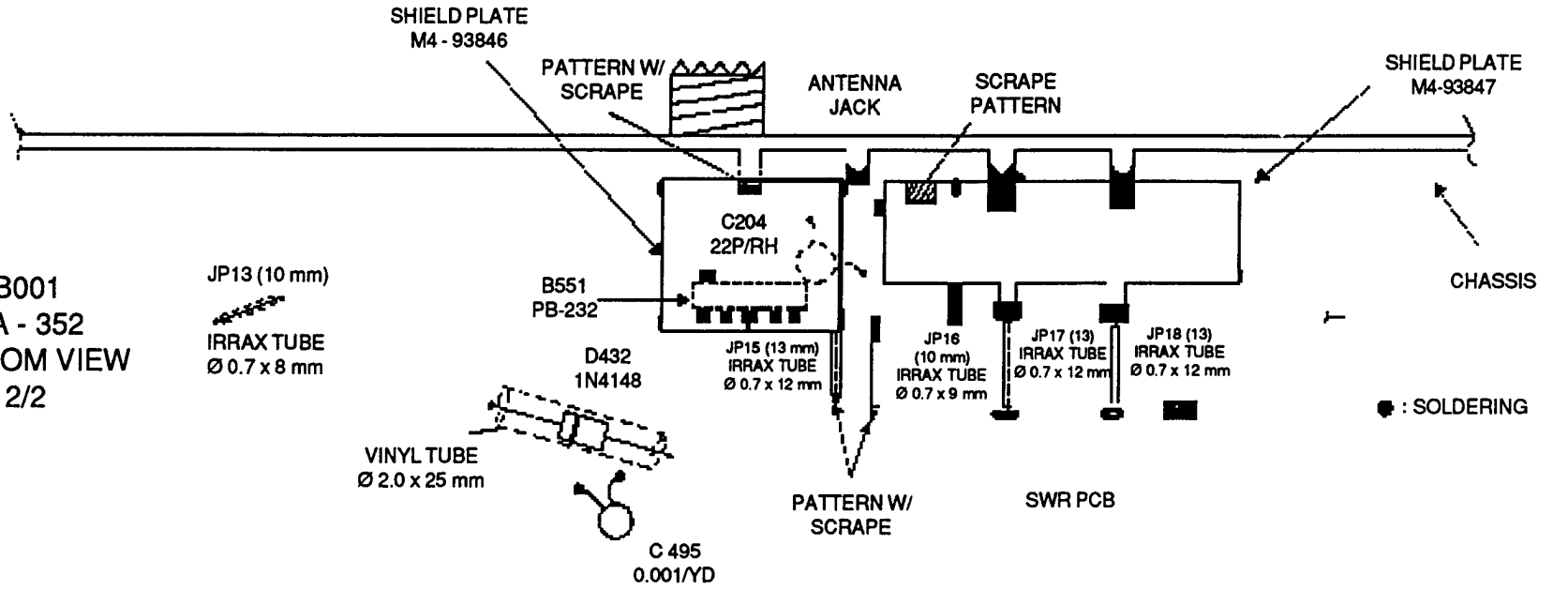

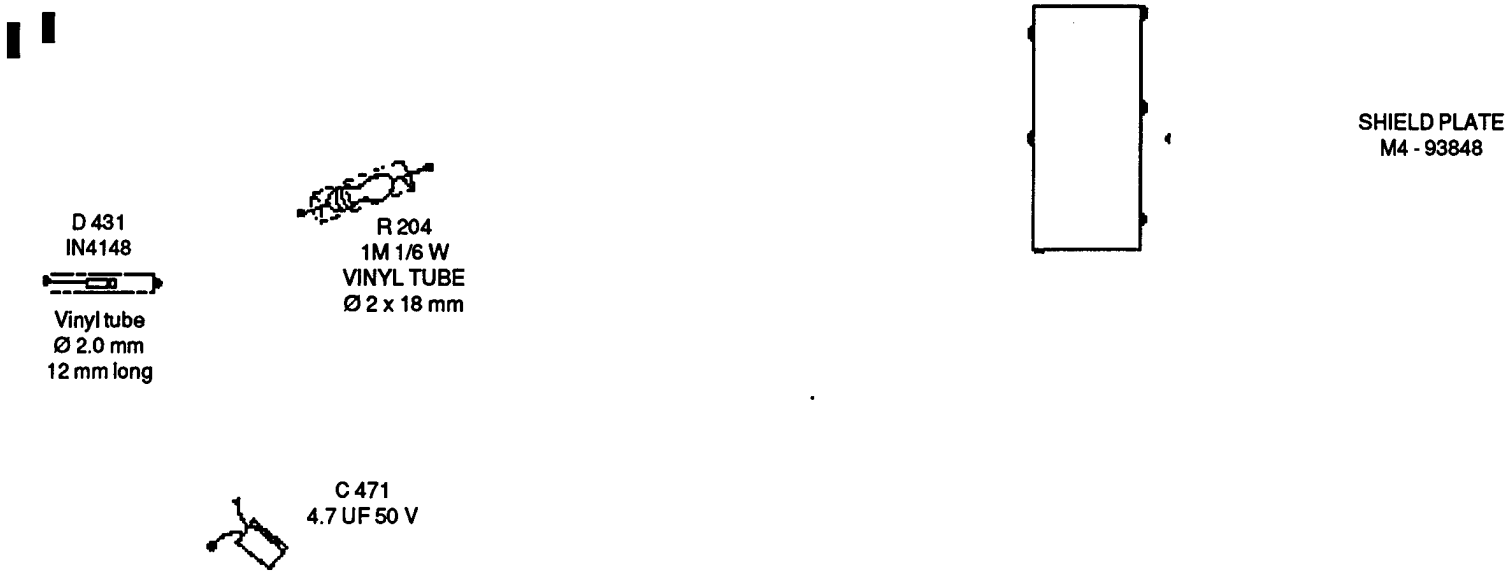

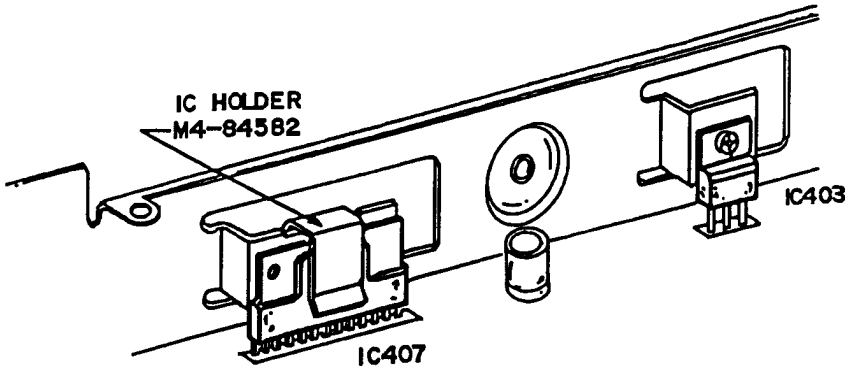
IC HOLDER
M4-84582
IC403
IC407

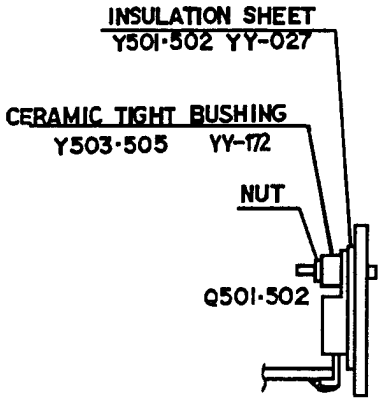
INSULATION SHEET
Y501·502 YY-027
CERAMIC TIGHT BUSHING
Y503·505 YY-172
NUT
Q501·502

LIST OF SPARE PARTS FOR JAMES

REF.	DESIGNATION	QTY/MOD
BC184	COIL LZ-041 0.47 µH	1
BC185	COIL LZ-0670.068 µH (CMS)	1
BR014	COIL LB-119	1
BR018	COIL LB-224	2
BR022	COIL LB-233	1
BR029	COIL LB-341	1
BR031	COIL LB-343	1
BR201	COIL LB-313	1
BR206	COIL LB-948	2
BR212	COIL LB-955	1
BR213	COIL LB-956	1
BR214	COIL LB-957	1
BR215	COIL LD-193	2
BR216	COIL LD-201	3
BR220	COIL LC-240	1
BT025	COIL LB-336	1
BT027	TRANSFORMER TF-453 MODUL	1
CF018	CAPA 0.047F 5.5 V	1
DC070	DIODE 1SS 226 (CMS)	1
DC071	DIODE DAN 235 K (CMS)	1
DC072	DIODE KV 1430 (CMS)	1
DC073	DIODE RLS 135 (CMS)	2
DC074	DIODE ND 434 G	1
DC076	DIODE MA 716 (CMS)	2
DV033	DIODE HSM 88 AS (CMS)	3
DV034	DIODE HSM 88 WA (CMS)	2
HM037	MICROPHONE MK-444	1

LIST OF SPARE PARTS FOR JAMES

REF.	DESIGNATION	QTY/MOD
HP028	LOUD SPEAKER SP-238	1
IL075	INTEGRATED CIRCUIT M 51951	1
IL076	INTEGRATED CIRCUIT TC 4S66F CMS	2
IL077	INTEGRATED CIRCUIT TL 750M08C	1
IL078	INTEGRATED CIRCUIT M 54995F CMS	2
IP022	INTEGRATED CIRCUIT MB 3735	1
IR027	INTEGRATED CIRCUIT 78L05	1
IR125	INTEGRATED CIRCUIT LA 4485	1
IR126	INTEGRATED CIRCUIT MN 3207	1
IR127	INTEGRATED CIRCUIT MN 3102	1
IS048	INTEGRATED CIRCUIT PLL 2002 A1	1
IS054	INTEGRATED CIRCUIT UC 1520	1
IS055	INTEGRATED CIRCUIT 93C46T CMS	1
IY439	PCB F/PANEL. FOR JAMES	1
IY441	PCB ECHO MODUL. JAMES	1
IY443	PCB VOLUME BUTTON JAMES	1
IY445	PCB MIKE FOR JAMES	1
JX003	JACK JK-068 (JK261/JK370/JK426)	1
JX077	JACK JK-423 EXT METER	1
JX080	JACK JK-729 MIC 6 BROCHES CHASSIS	1
OA030	DISPLAY CRIS. LIQ DL-071	1
OX028	DIODE CL 140YG (CMS)	12
OX029	DIODE CL 140D (CMS)	12
PF052	FILTER FL-566	1
PQ060	QUARTZ 4.190 M FK-007	1
QX341	CRADLE SCREW PRESIDENT S/MODEL	2

REF.	DESIGNATION	QTY/MOD
QX345	FRONT PANEL JAMES	1
QX347	LIGHT DIFFUSER (B) JAMES	1
QX348	LIGHT DIFFUSER (A) JAMES	1
QX349	DISPLAY PLATE JAMES	1
QX352	LIGHT DIFFUSER PMMA JAMES	1
QX353	LIGHT SUPPORT JAMES	1
QX355	SUPPORT (A) PMMA JAMES	1
QX356	SUPPORT (B) PMMA JAMES	1
QX357	CHANNEL BUTTON GEORGE	1
QX361	INT. DOUBLE BUTTON/GEORGE	1
QX362	EXT. DOUBLE BUTTON/GEORGE	1
QX363	PUSH BUTTON (A) JAMES	1
QX364	PUSH BUTTON (B) JAMES	1
QX365	PUSH BUTTON (C) JAMES	1
QX366	BUTTON GEORGE	4
QX367	CRADLE JAMES	1
QX368	LOWER CASING JAMES	1
QX370	UPPER CASING JAMES	1
RV098	POTENTIOM. RV-785 1KA/1KB R/MG	1
RV099	POTENTIOM. RV-786 10KA VOLUME	1
RV100	POTENTIOM. RV-787 50KB CAL/SWR	2
RV101	POTENTIOM. RV-788 10KB SQ/CLARI	1
SS035	SWITCH SR-421 CHANNELS	1
SX094	SWITCH SW-752 FUNCTIONS	18
TH001	TRANSISTOR 2SC 2166	1
TX003	TRANSISTOR 2SC 1674	1
TX010	TRANSISTOR 2SC 2086	1
TX117	TRANSISTOR 2SC 3242	1
TX300	TRANSISTOR 2SC 2814 (CMS)	8

TX301	TRANSISTOR 2SD 1048X (CMS)	5
TX306	TRANSISTOR 2SA 1179 (CMS)	5
TX307	TRANSISTOR 2SC 2812 (CMS)	10
TX352	TRANSISTOR 2SA 950	1
TX353	TRANSISTOR 2SB 1135	2
TX355	TRANSISTOR 2SC 3356 (CMS)	1
TX356	TRANSISTOR 2SC 3772 (CMS)	3
TX357	TRANSISTOR 2SD 1683S	2
TX358	TRANSISTOR DTA 144 EK (CMS)	5
TX359	TRANSISTOR DTA 143 XK (CMS)	1
TX360	TRANSISTOR DTA 114 TK (CMS)	4
TX361	TRANSISTOR 2SK 323 (CMS)	2
TY129	TRANSISTOR 2SC 1945	1
XV004	LIGHT V.U.-METER PZ-028	2
XV005	LIGHT V.U.-METER PZ-035	2

SPARE PARTS SPECIFIC FOR EACH SET

EMITTER/ RECEIVER	P.A. power amplifier	P.L.L. phase loop locked	L.F. Low Frequencies
JIMMY	2SC 2166	SM 5124	TDA 1905
JOHNNY	2SC 2166	SM 5124	TDA 1905
HARRY	2SC 2166	SM 5124	TDA 1905
TAYLOR	2SC 2029	TC 9106/SM 5126B	MB 3712
VALERY	2SC 2029	TC 9109/SM 5126A	MB 3712
WILSON	2SC 2166	SM 5124	UPC 1242
HERBERT	2SC 2166	TC 9106/SM 5126B	UPC 1242
ROBERT (SS-120)	2SC 1944	UPD 2816	TA 7222
JACK	2SC 2312	MB 8719	UPC 1242 *
GRANT	2SC 2312	MB 8719	UPC 1242 *
J.F.K.	2SC 1944	UPD 2816	MB 3712
RICHARD (SS-360)	2SC 2312	MC 145106	TA 7222
JACKSON	MRF 477	MC 145106	UPC 1242 *
LINCOLN	MRF 477	PLL 0305	TDA 1905
BENJAMIN	2SC 2312	UPD 2824	UPC 1242
WILLIAM	2SC 2166	SM 5125 A	TDA 2822
MC 6700	2SC 1946	MB 8789	MB 3713 (HP) TA 7066 (comb)
JAMES	2SC 1945	PLL 2002 A1	LA 4485
GEORGE	2SC 1969	PLL 2002 A1	LA 4485

* In older models of this type, UPC 1182 is used for LF

SPARE PARTS SPECIFIC FOR EACH SET

REF. LF CIRCUIT	EMITTER / RECEIVER
MB 3712	TAYLOR VALERY J.F.K. (2)
TDA 1905	HARRY-JIMMY LINCOLN JOHNNY
UPC 1242	GRANT JACKSON JACK HERBERT BENJAMIN
TDA 2822	WILLIAM
TA 7222	SS-120/ROBERT SS-360/RICHARD RONALD FRANKLIN
LA 4485	GEORGE JAMES
MB 3713	MC-6700 (H.P.)
UPC 1182	JACK old GRANT model JACKSON
DISPLAY	
UR 202	VALERY ROBERT J.F.K. RICHARD GRANT JACKSON JACK

REF. P.A.	EMITTER/ RÉCEIVER
2SC 2166	JOHNNY HERBERT WILSON HARRY WILLIAM JIMMY
2SC 1969	GEORGE
2SC 2029	TAYLOR VALERY
2SC 1945	JAMES
2SC 1944	SS-120/ROBERT J.F.K.
2SC 2312	SS-360/RICHARD GRANT JACK RONALD FRANKLIN BENJAMIN
MRF 477	JACKSON LINCOLN
MAINTENANCE MANUALS	ALL MODELS
VU METER BULBS	ALL MODELS

VU-METER
SWITCH
POTENTIOMETER
QUARTZ

Specific to each type of equipment

SPARE PARTS COMMON TO SEVERAL SETS

REF. P.L.L.	ÉMITTER / RÉCEIVER
SM 5124A	HARRY - JIMMY JOHNNY WILSON
TC 9106 SM 5126B	TAYLOR HERBERT
TC 9109 SM 5126A	VALERY
UPD 2816	SS-120/ROBERT J.F.K.
MB 8719	GRANT JACK
MC 145106	SS-360/RICHARD JACKSON RONALD FRANKLIN
PLL 0305	LINCOLN
UPD 2824	BENJAMIN
MB 8789	MC 6700
SM 5125A	WILLIAM
PLL 2002 A1	JAMES GEORGE

REF. LOUD SPEAKER	ÉMITTER/ RÉCEIVER
SP 227/SP 306	VALERY TAYLOR JACK PC 33X/43
SP 226/SP 323	SS-360 GRANT JACKSON
SP 244/SP 301	J.F.K. SS-120
SP169	HARRY JIMMY JOHNNY WILSON
SP 149	HERBERT
SP 238	JAMES GEORGE

PRESIDENT
ELECTRONICS EUROPE

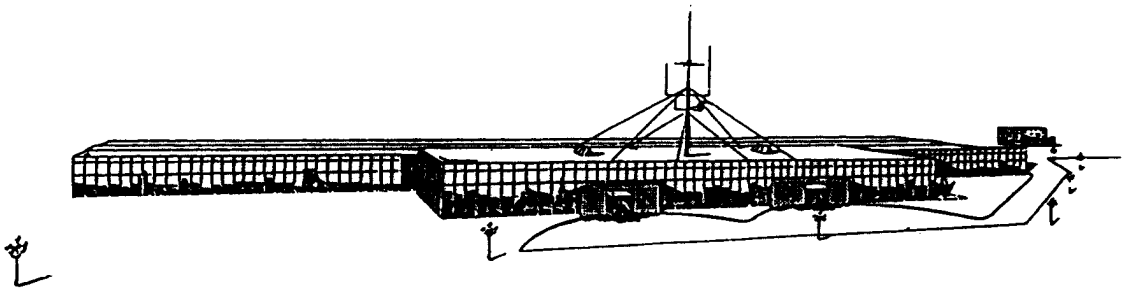

SIEGE SOCIAL - FRANCE
Route de SETE - BP 100
34540 BALARUC - Tél : 67.46.27.27
Télex : 490534F - Fax : 67.48.48.49

SUCCURSALE "ILE DE FRANCE"
50/56, rue du Pré des Aulnes
Parc d'activités des Arpents
77340 PONTAULT-COMBAULT
Tél : (1) 60.29.28.27 - Fax : (1) 60.28.44.00

N°1 CB PRESIDENT

VENTE EXCLUSIVE AUX DISTRIBUTEURS - 2 SUCCURSALES A VOTRE SERVICE

S.A. CAPITAL 20.000.000 F.F. - SIREN SETE 315 230 490

D702	CL140D CD T
D703	CL140D CD T
D704	CL140D CD T
D705	CL140D CD T
D706	CL140D CD T
D707	CL140D CD T
D708	CL140D CD T
D711	CL140D CD T
D712	CL140D CD T
D713	CL140D CD T
D715	CL140D CD T
D716	CL140D CD T
D717	CL140YG X T
D718	CL140YG X T
D719	CL140YG X T
D721	CL140YG X T
D722	CL140YG X T
D723	CL140YG X T
D725	CL140YG X T
D726	CL140YG X T
D727	CL140YG X T
D728	CL140YG X T
D731	CL140YG X T
D732	CL140YG X T
D733	RLS4148

LC701	DL 071
R722	IM
Y701	FK007
	KBR 419MWSTR
VR701	RV 786 10KA
VR702	RV 788 10KB
VR703	RV 787 50KB
VR705	RV 787 50 KB
VR781	RV 785 1KA
	1KB
PL 701	PZ 035
PL 702	PZ 035
PL 703	PZ 028
PL 705	PZ 028
J 751	JK 729

S701	SW 752
S702	SW 752
S703	SW 752
S705	SW 752
S706	SW 752
S707	SW 752
S708	SW 752
S711	SW 752
S712	SW 752
S713	SW 752
S715	SW 752
S716	SW 752
S717	SW 752
S718	SW 752
S721	SW 752
S722	SW 752
S723	SW 752
S725	SW 752
S726	SR 421

C701	10V4.7 C 227
C702	0.1/C
C703	0.1/C
C705	0.1/C
C706	0.047/C
C707	0.022/C
C708	5.5V0.047F
	C 127
D701	HSM88WA
D751	HZK7C
D752	HZK7C
Q701	2SC2812 L5
Q702	2SC2812 L5
Q703	2SA1179 M6
Q705	2SC2812 L5
Q706	2SD1048 X6
Q707	2SD1048 X6
Q708	2SD1048 X6
Q711	2SD1048 X6
IC701	UC1520
IC702	M51951AML
IC703	93C46T/SN

R701	47K
R702	470K
R703	470K
R704	1M
R705	470K
R706	47K
R707	10K
R708	1K
R709	47K
R710	RZ 035
R711	RZ 035
R712	47K
R713	10K
R715	47K
R716	47K
R717	820K
R718	47K
R721	10K
R723	47K
R725	10K
R726	10K
R727	47K
R728	47K
R731	47K
R732	47K
R733	47K
R735	10K
R739	560
R740	560
R741	560

R742	560
R743	560
R744	560
R745	560
R746	560
R747	560
R748	560
R749	560
R750	560
R751	560
R752	3.3K
R753	3.3K
R754	560
R755	560
R756	560
R757	560
R758	560
R759	560
R760	560
R761	560
R762	560
R763	560
R764	560
R765	3.3K
R766	3.3K
R772	560
R773	RZ 035
R774	1K
R775	100K
R776	47K

R777	10K
R778	47
R779	820 V6W
J701	JK 712 10P
J702	JK 712 10P
J753	JK 324 3P
J755	JK 324 4P

1A

1B

1B

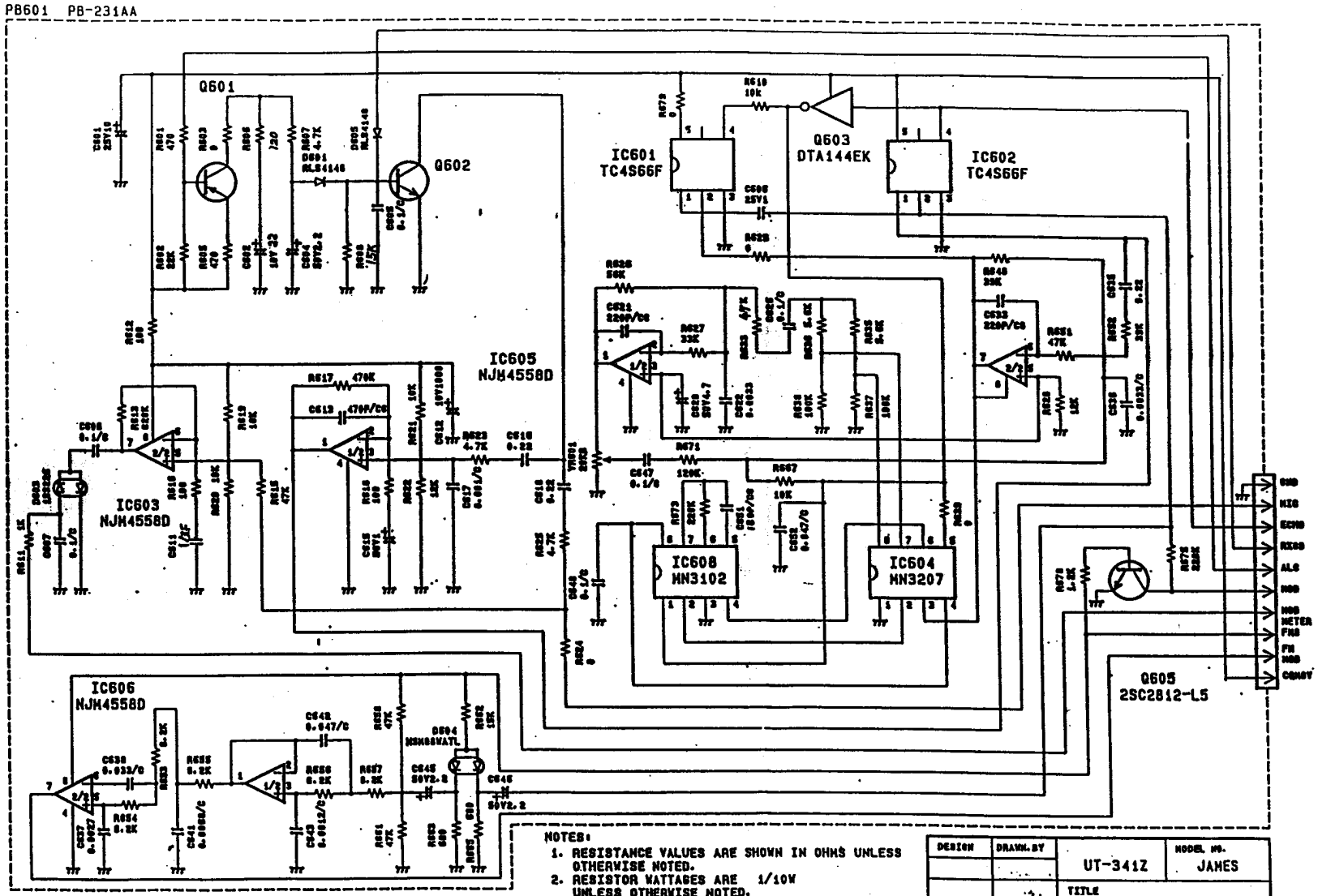

NOTES:

1. RESISTANCE VALUES ARE SHOWN IN OHMS UNLESS OTHERWISE NOTED.
2. RESISTOR WATTAGES ARE 1/10W UNLESS OTHERWISE NOTED.
3. CAPACITANCE VALUES ARE INDICATED IN MICRO FARADS UNLESS OTHERWISE NOTED. (P=MICRO-MICRO FARAD)
4. ALL CAPACITORS TEMPERATURE CHRACTERISTICS ARE ZF UNLESS OTHERWISE NOTED.
5. CHIP PARTS ARE NOT SPECIFIED IN THIS SCHEMATIC DIAGRAM. PLEASE REFER TO THE PARTS LIST FOR THE CHIP PARTS.

DESIGN	DRAWN. BY	UT-341Z	MODEL NO. JAMES
		TITLE SCHEMATIC DIAGRAM	
CHECK. BY	APPRO. BY		
		DRAWING NO.	
REV. NO.			

1A

PB601 PB-231AA

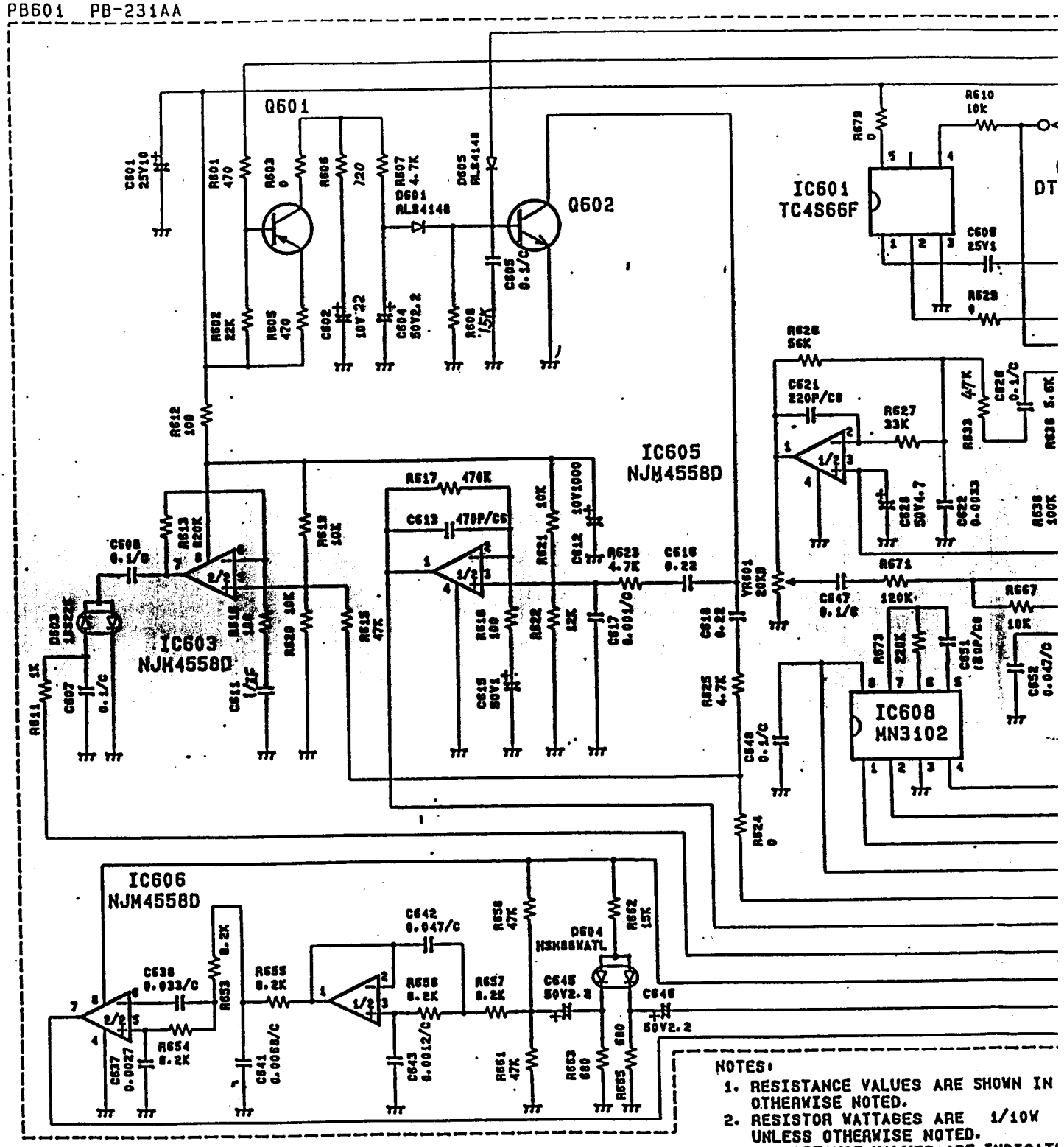

NOTES:

1. RESISTANCE VALUES ARE SHOWN IN
   OTHERWISE NOTED.
2. RESISTOR WATTAGES ARE 1/10W
   UNLESS OTHERWISE NOTED.
3. CAPACITANCE VALUES ARE INDICAT
   FARADS UNLESS OTHERWISE NOTED.
   (P=MICRO-MICRO FARAD)
4. ALL CAPACITORS TEMPERATURE CHA
   ARE ZF UNLESS OTHERWISE NOTED.
5. CHIP PARTS ARE NOT SPECIFIED
   SCHEMATIC DIAGRAM.
   PLEASE REFER TO THE PARTS LIS
   THE CHIP PARTS.

(1B) (1

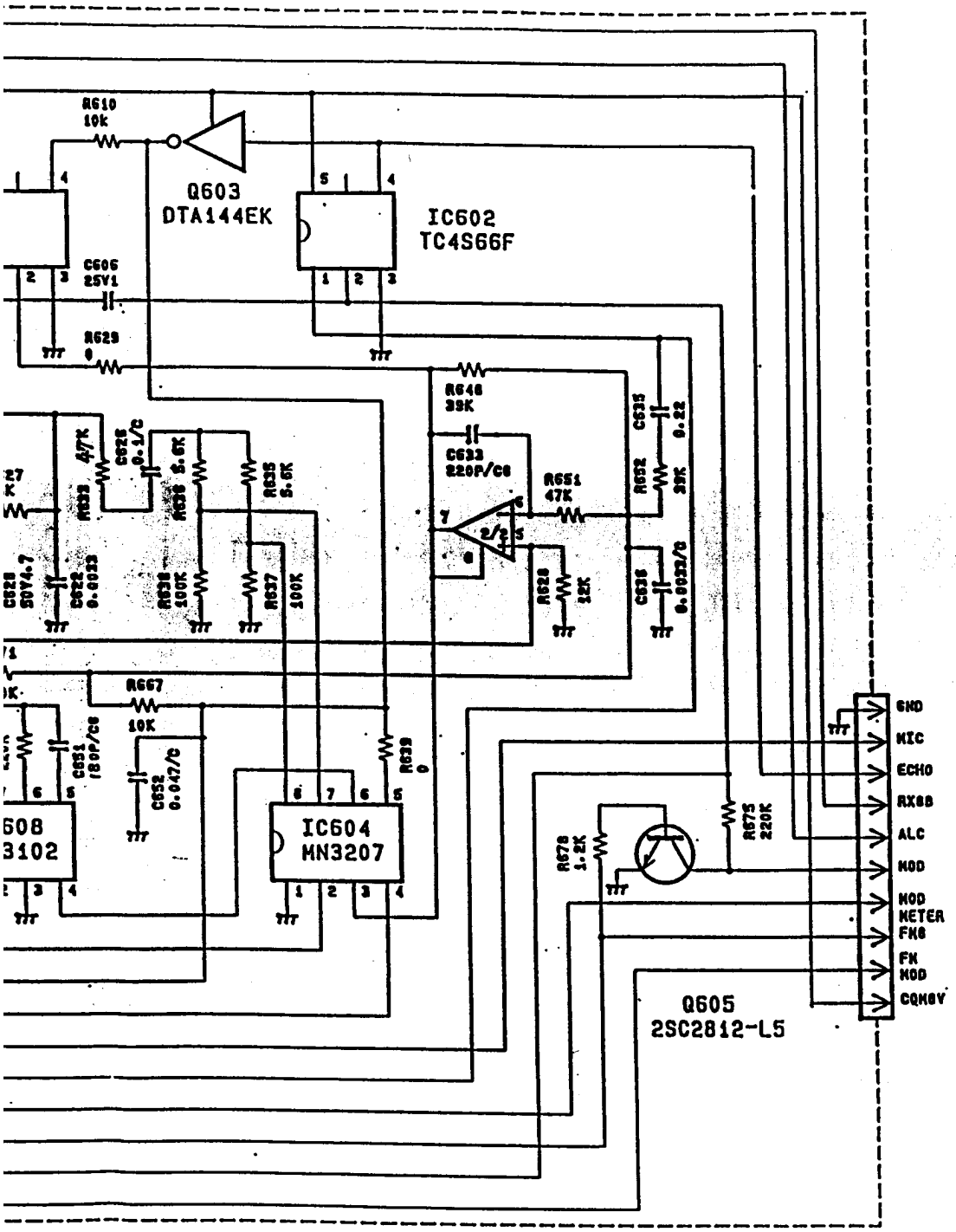

ES ARE SHOWN IN OHMS UNLESS
.
ES ARE 1/10W
E NOTED.
UES ARE INDICATED IN MICRO
THERWISE NOTED.
FARAD)
TEMPERATURE CHRACTERISTICS
THERWISE NOTED.
NOT SPECIFIED IN THIS
RAM.
) THE PARTS LIST FOR

DESIGN	DRAWN.BY	UT-341Z	MODEL NO. JAMES
		TITLE SCHEMATIC DIAGRAM	
CHECK.BY	APPRO.BY		
		DRAWING NO.	
REV. NO.			

SYNOPTIQUE

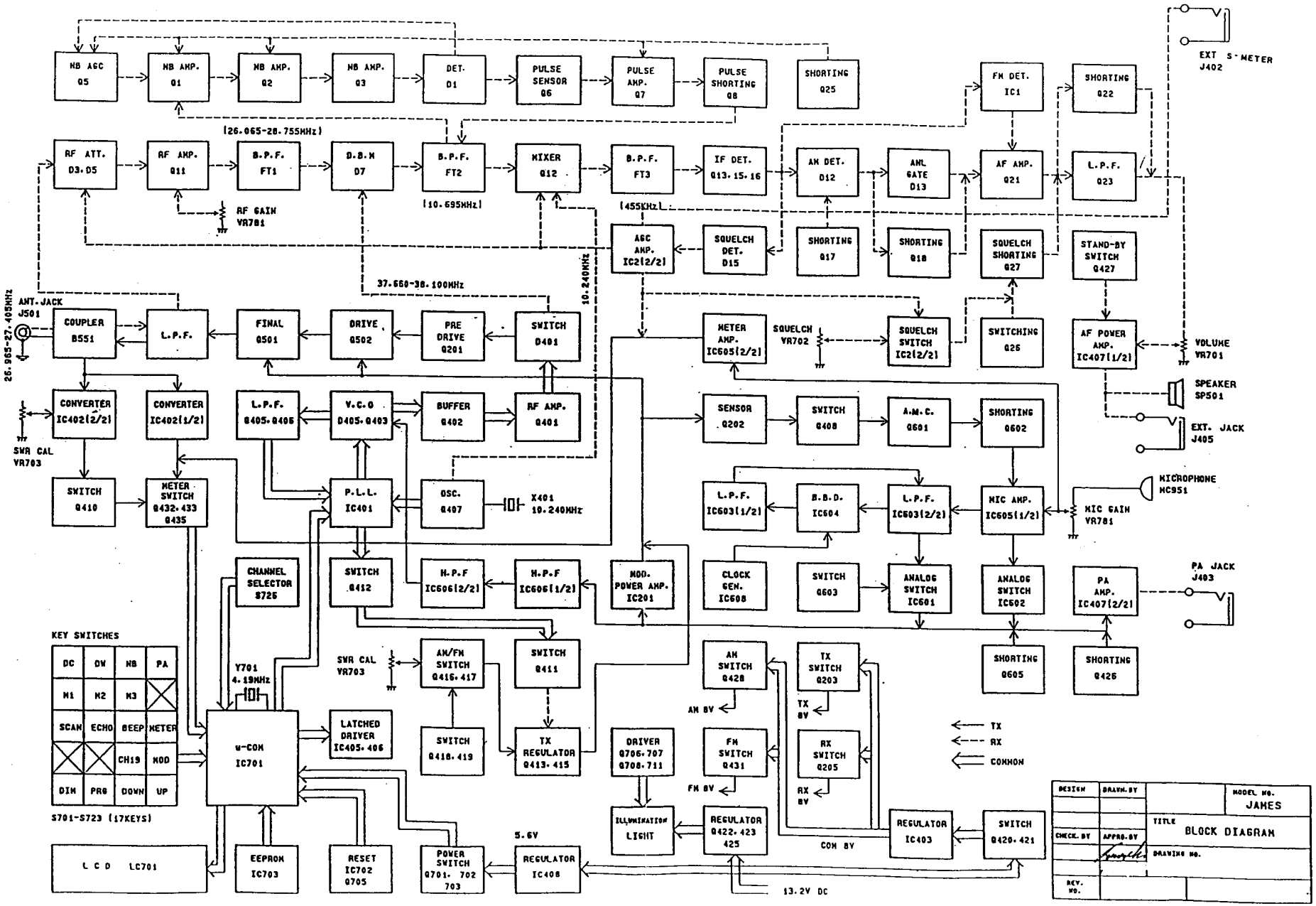
NB AGC Q5
NB AMP. Q1
NB AMP. Q2
NB AMP. Q3
DET. D1
PULSE SENSOR Q6
PULSE AMP. Q7
PULSE SHORTING Q8
SHORTING Q25
FM DET. IC1
SHORTING Q22
EXT S-METER J402
(26.065-28.755MHz)
RF ATT. D3.D5
RF AMP. Q11
B.P.F. FT1
D.B.M D7
B.P.F. FT2
MIXER Q12
B.P.F. FT3
IF DET. Q13.15.16
AM DET. D12
ANL GATE D13
AF AMP. Q21
L.P.F. Q23
RF GAIN VR781
(10.695MHz)
(455KHz)
AGC AMP. IC2(2/2)
SQUELCH DET. D15
SHORTING Q17
SHORTING Q18
SQUELCH SHORTING Q27
STAND-BY SWITCH Q427
37.660-38.100MHz
10.240MHz
ANT. JACK J501
26.965-27.405MHz
COUPLER B551
L.P.F.
FINAL Q501
DRIVE Q502
PRE DRIVE Q201
SWITCH Q401
METER AMP. IC605(2/2)
SQUELCH VR702
SQUELCH SWITCH IC2(2/2)
SWITCHING Q26
AF POWER AMP. IC407(1/2)
VOLUME VR701
SPEAKER SP501
EXT. JACK J405
CONVERTER IC402(2/2)
CONVERTER IC402(1/2)
L.P.F. Q405.Q406
V.C.O Q405.Q403
BUFFER Q402
RF AMP. Q401
SENSOR Q202
SWITCH Q408
A.M.C. Q601
SHORTING Q602
SWR CAL VR703
SWITCH Q410
METER SWITCH Q432.433 Q435
P.L.L. IC401
OSC. Q407
X401 10.240MHz
L.P.F. IC603(1/2)
B.B.D. IC604
L.P.F. IC603(2/2)
MIC AMP. IC605(1/2)
MICROPHONE MC951
MIC GAIN VR781
CHANNEL SELECTOR S726
SWITCH Q412
H.P.F IC606(2/2)
H.P.F IC606(1/2)
MOD. POWER AMP. IC201
CLOCK GEN. IC608
SWITCH Q603
ANALOG SWITCH IC601
ANALOG SWITCH IC602
PA AMP. IC407(2/2)
PA JACK J403
KEY SWITCHES
DC
OW
NB
PA
M1
M2
M3
SCAN
ECHO
BEEP
METER
CH19
MOD
DIM
PRG
DOWN
UP
S701-S723 (17KEYS)
Y701 4.19MHz
SWR CAL VR703
AM/FM SWITCH Q416.417
SWITCH Q411
AM SWITCH Q428
TX SWITCH Q203
SHORTING Q605
SHORTING Q426
AM 8V
TX 8V
u-COM IC701
LATCHED DRIVER IC405.406
SWITCH Q418.419
TX REGULATOR Q413.415
DRIVER Q706.707 Q708.711
FM SWITCH Q431
RX SWITCH Q205
FM 8V
RX 8V
TX
RX
COMMON
ILLUMINATION LIGHT
REGULATOR Q422.423 425
REGULATOR IC403
SWITCH Q420.421
COM 8V
5.6V
L C D LC701
EEPROM IC703
RESET IC702 Q705
POWER SWITCH Q701.702 703
REGULATOR IC408
13.2V DC
DESIGN
DRAWN BY
CHECK BY
APPRO BY
REV. NO.
MODEL NO.
JAMES
TITLE
BLOCK DIAGRAM
DRAWING NO.

PLATINE PRINCIPALE
Côté composants

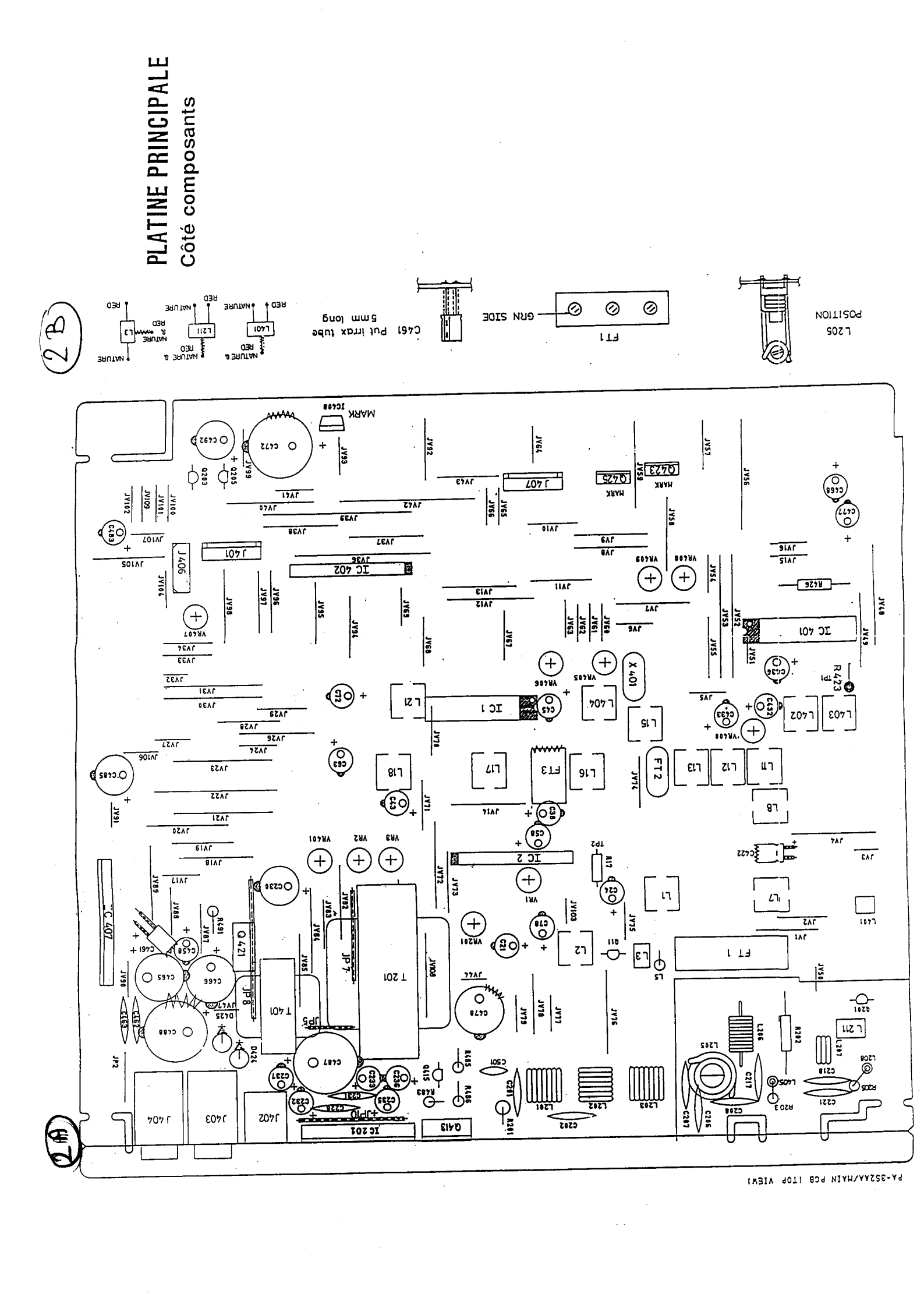

PA-352AA/MAIN PCB (TOP VIEW)

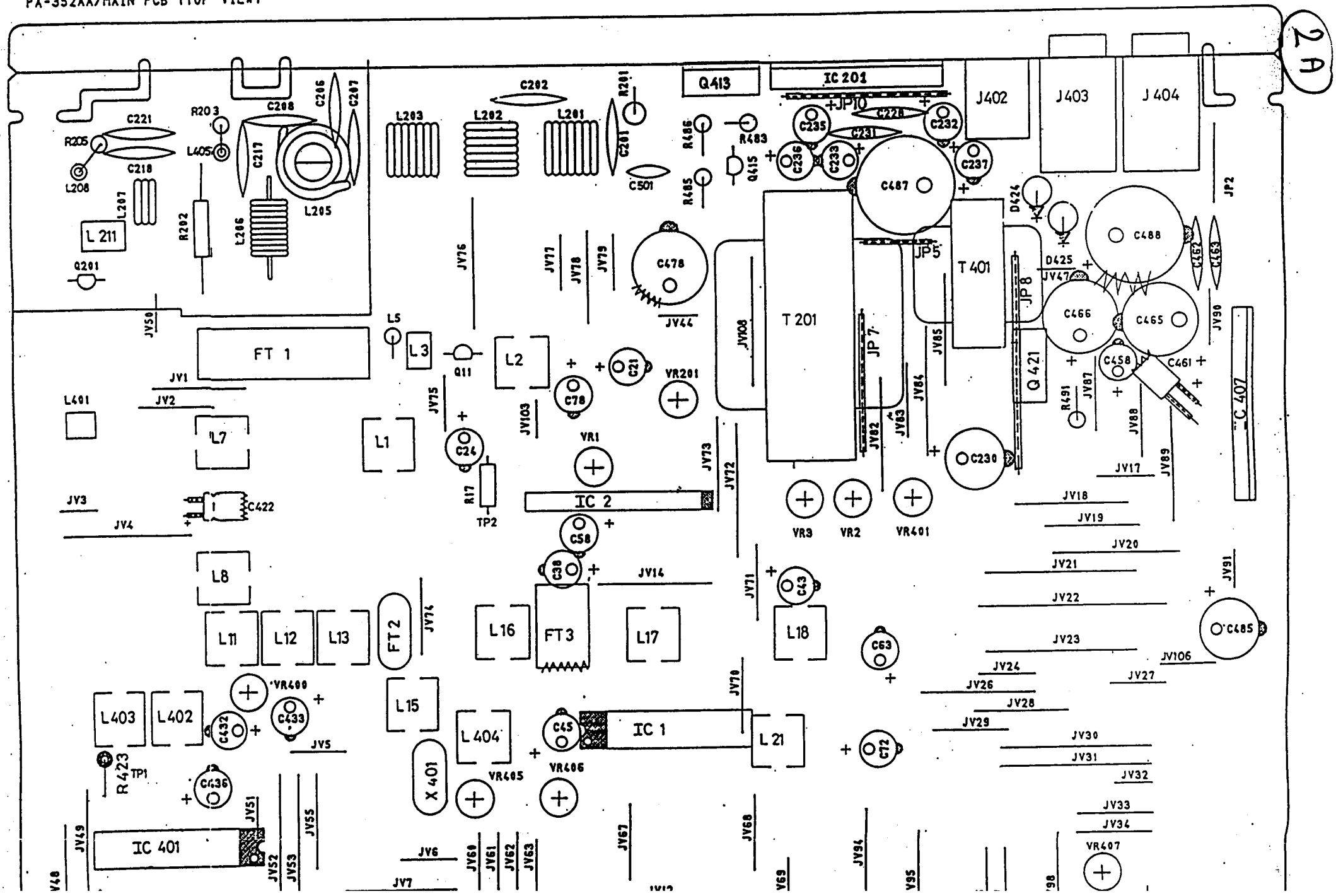

2B

PLATINE PRINCIPALE

Côté composants

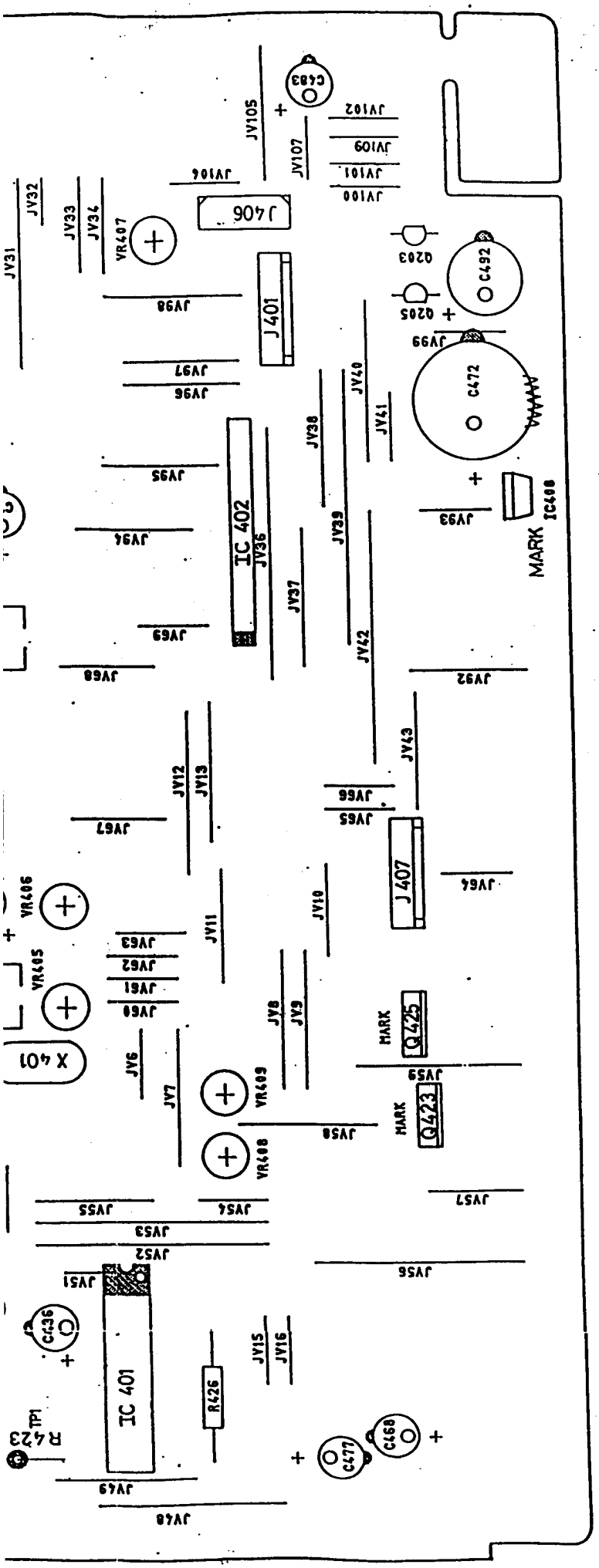

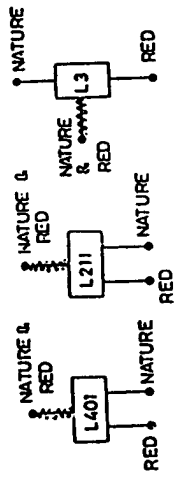

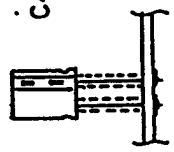

C461 Put irrax tube 5mm long

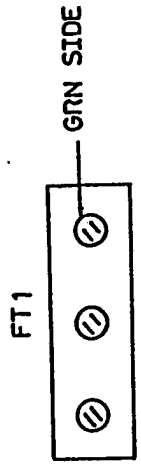

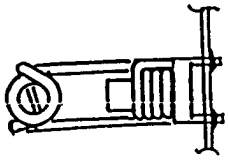

L 205 POSITION

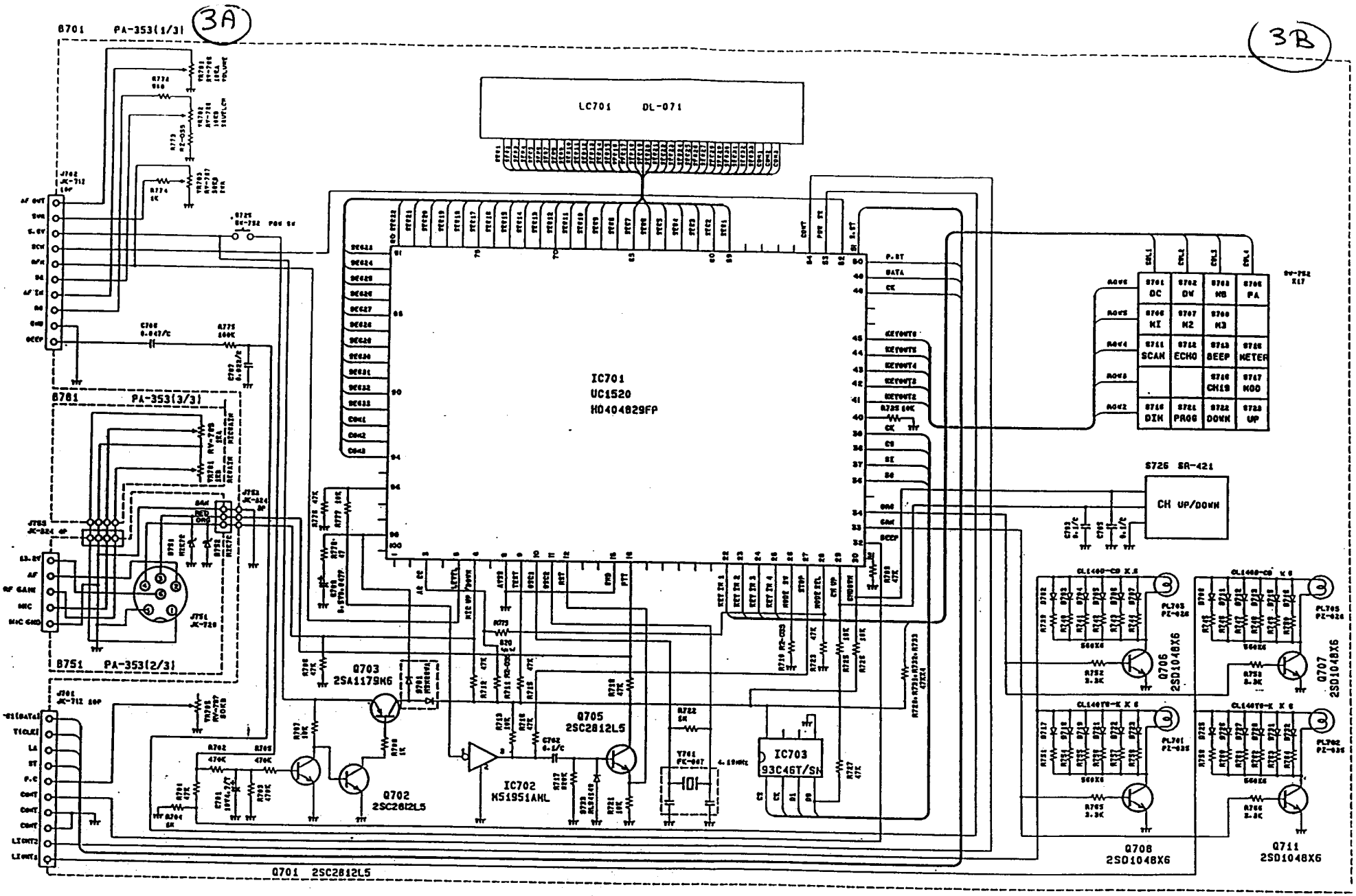

NOTES:

1. RESISTANCE VALUES ARE SHOWN IN OHMS UNLESS OTHERWISE NOTED.
2. RESISTOR WATTAGES ARE 1/10W UNLESS OTHERWISE NOTED.
3. CAPACITANCE VALUES ARE INDICATED IN MICRO FARADS UNLESS OTHERWISE NOTED. (P=MICRO-MICRO FARAD)
4. CHIP PARTS ARE NOT SPECIFIED IN THIS SCHEMATIC DIAGRAM. PLEASE REFER TO THE PARTS LIST FOR THE CHIP PARTS.

DESIGN	DRAWN.BY	UT-341Z	MODEL NO. JAMES
		TITLE SCHEMATIC DIAGRAM	
CHECK.BY	APPRO.BY	DRAWING NO. ES2-0325	
		P.E.E	

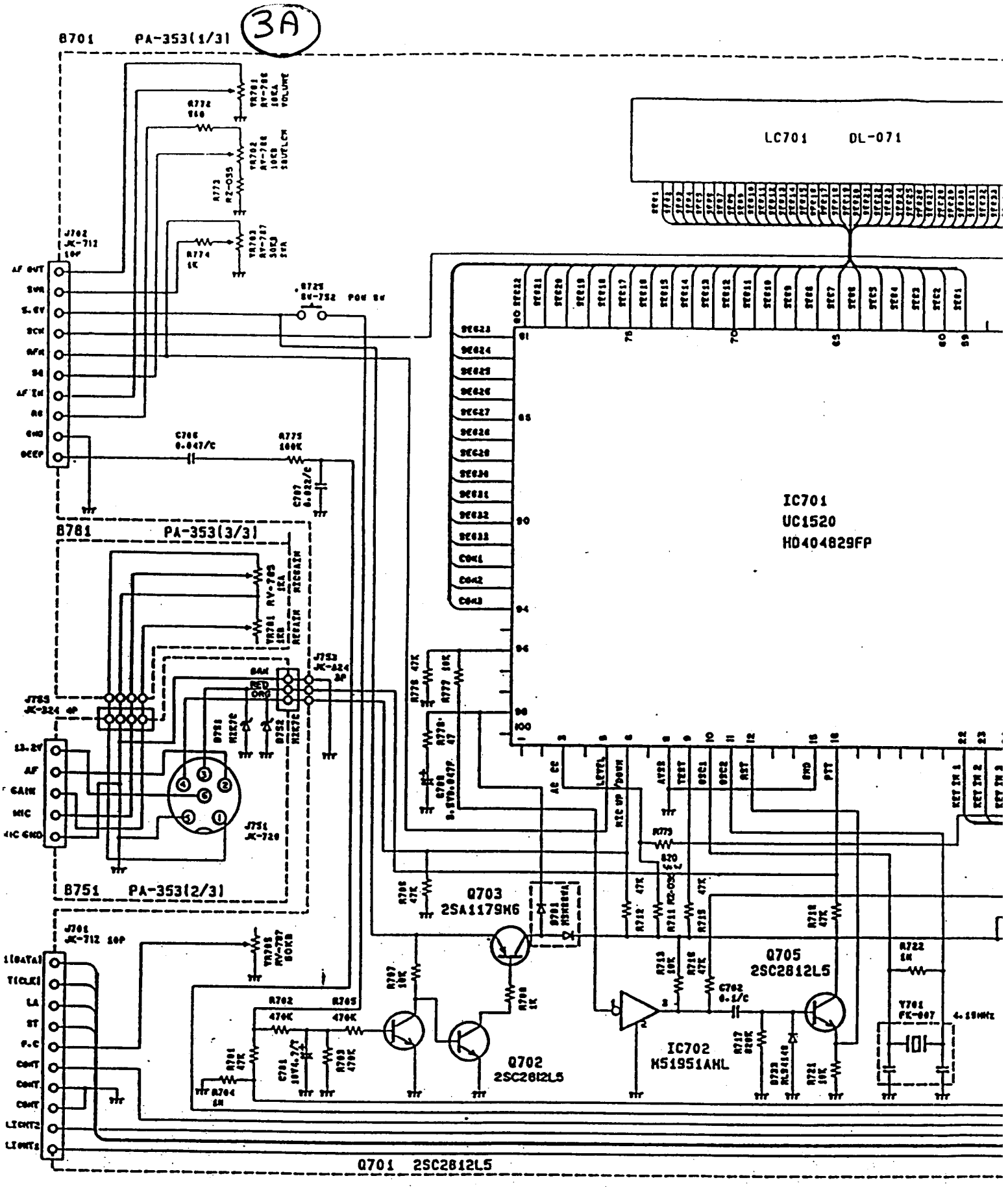

NOTES:

1. RESISTANCE VALUES ARE SHOWN IN OHMS UN
   OTHERWISE NOTED.
2. RESISTOR WATTAGES ARE 1/10W
   UNLESS OTHERWISE NOTED.
3. CAPACITANCE VALUES ARE INDICATED IN MI
   FARADS UNLESS OTHERWISE NOTED.
   (P=MICRO-MICRO FARAD)

3B

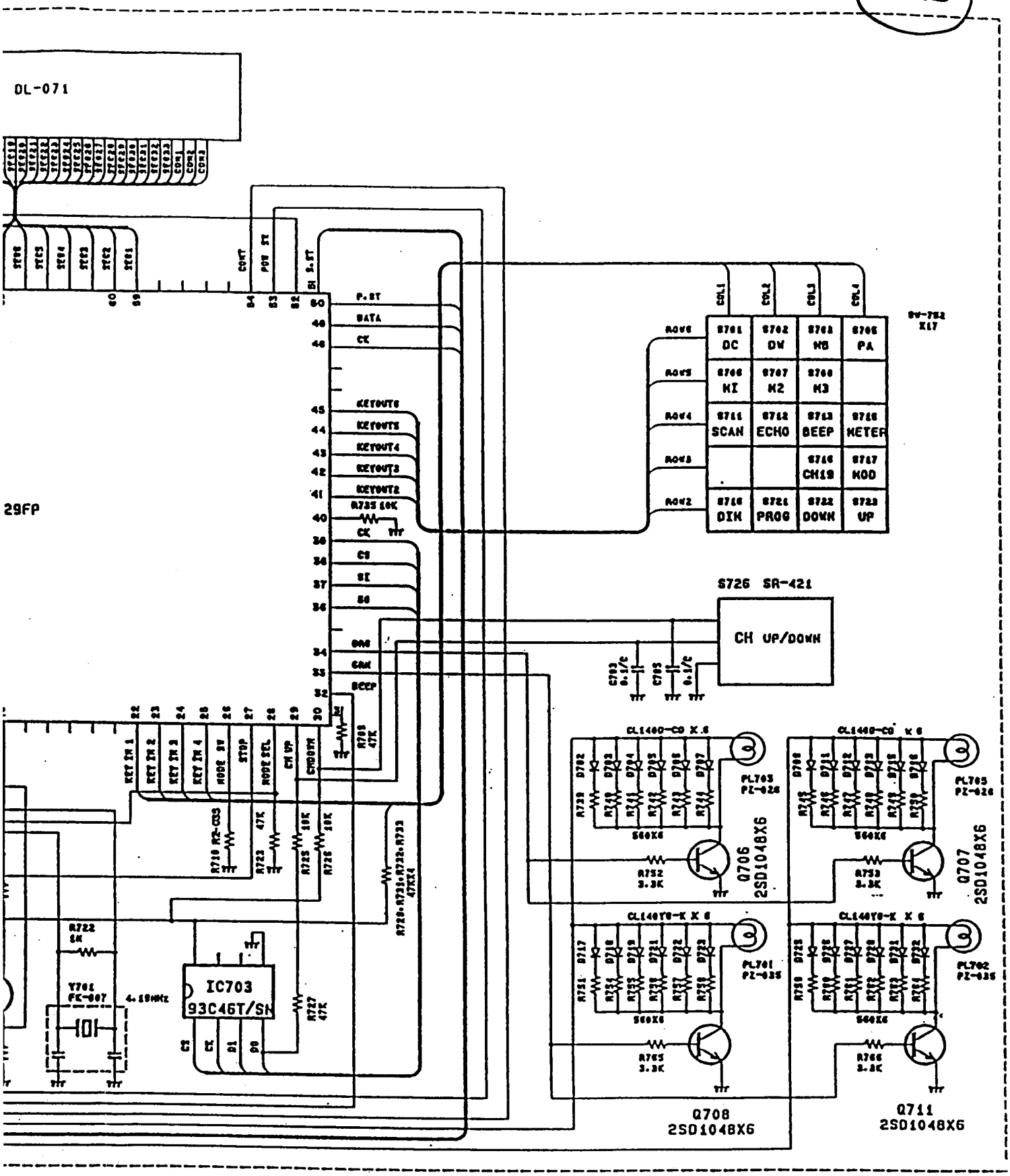

ARE SHOWN IN OHMS UNLESS

ARE 1/10W
NOTED.

S ARE INDICATED IN MICRO
ERWISE NOTED.
RAD)

4. CHIP PARTS ARE NOT SPECIFIED IN THIS SCHEMATIC DIAGRAM.
PLEASE REFER TO THE PARTS LIST FOR THE CHIP PARTS.

DESIGN	DRAWN. BY	UT-341Z	MODEL NO. JAMES
		TITLE SCHEMATIC DIAGRAM	
CHECK. BY	APPRO. BY		
		DRAWING NO. ES2-0325	
			P.E.E

4A

PLATINE FACE AVANT

4B

B701 PA-353AA 1/3 FRONT PCB (TOP VIEW)

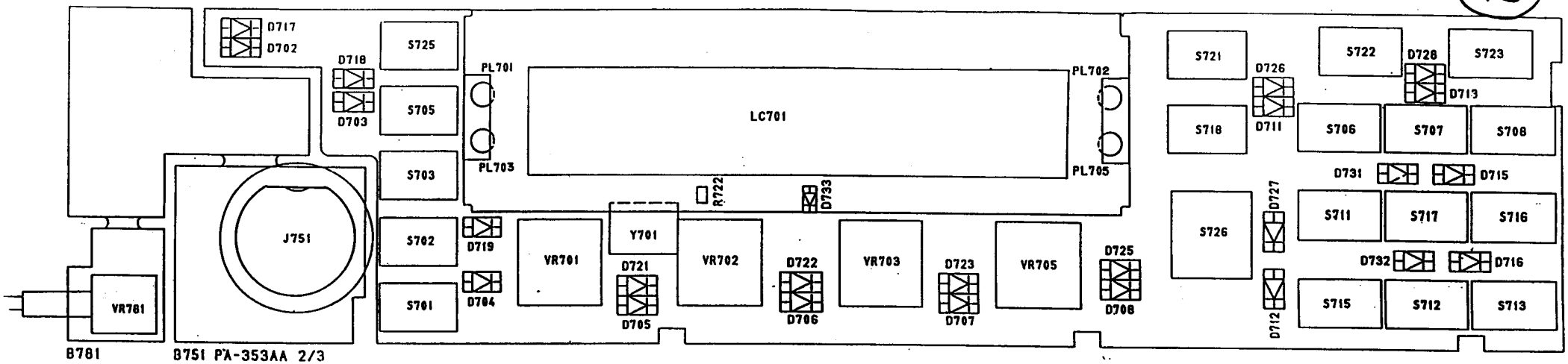

B781
PA-353AA 3/3

B751 PA-353AA 2/3

B701 PA-353AA 1/3 FRONT PCB (BOTTOM VIEW)

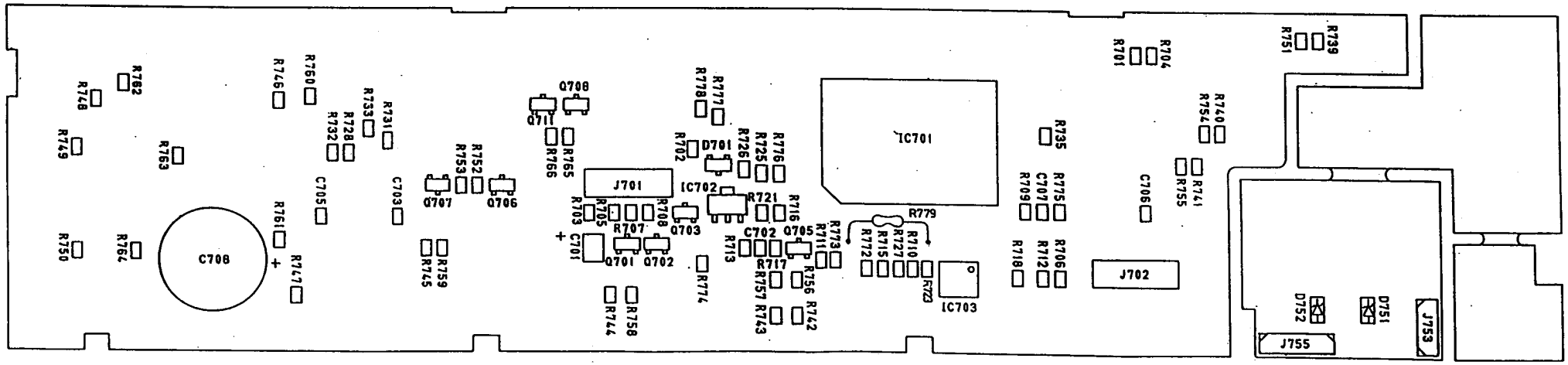

B751 PA-353AA 2/3

B781
PA-353AA 3/3

4A

B701 PA-353AA 1/3 FRONT PCB (TOP VIEW)

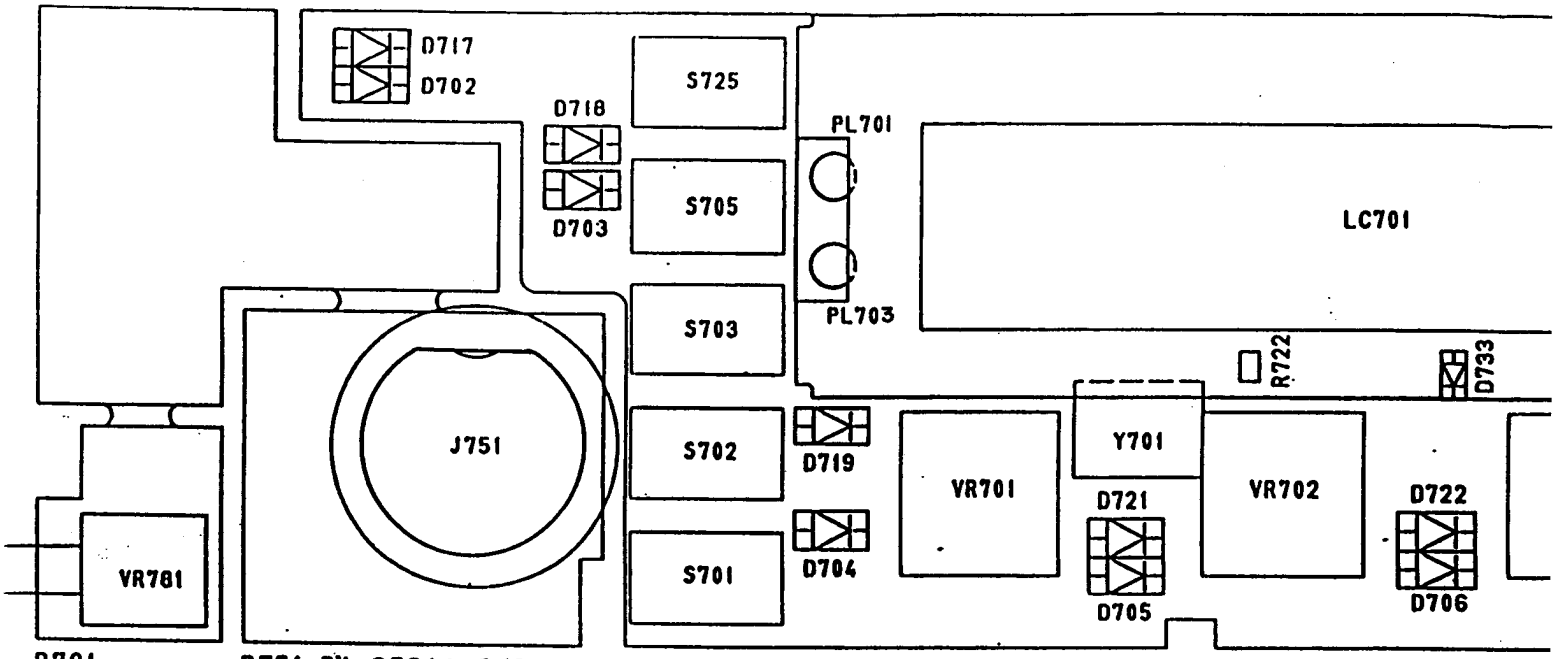

B781
PA-353AA 3/3

B751 PA-353AA 2/3

B701 PA-353AA 1/3 FRONT PCB (BOTTOM VIEW)

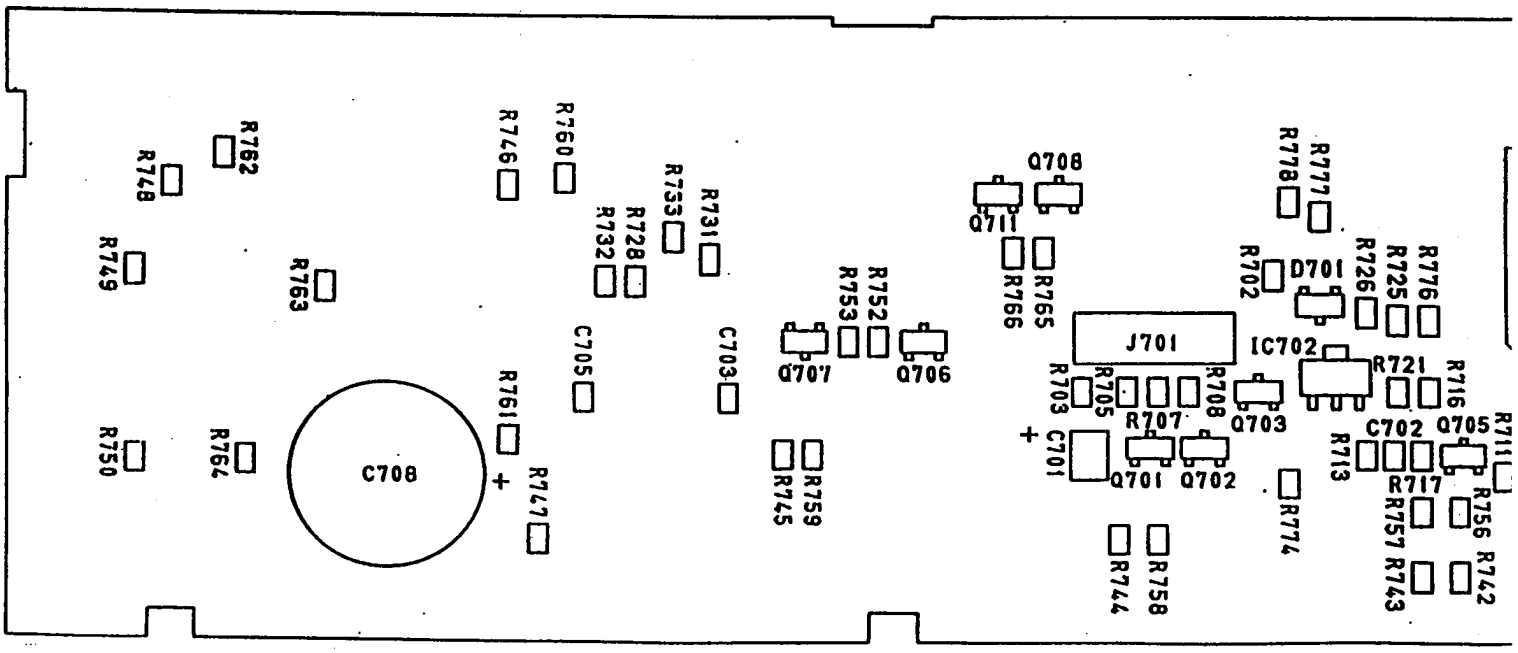

PLATINE FACE AVANT

41B

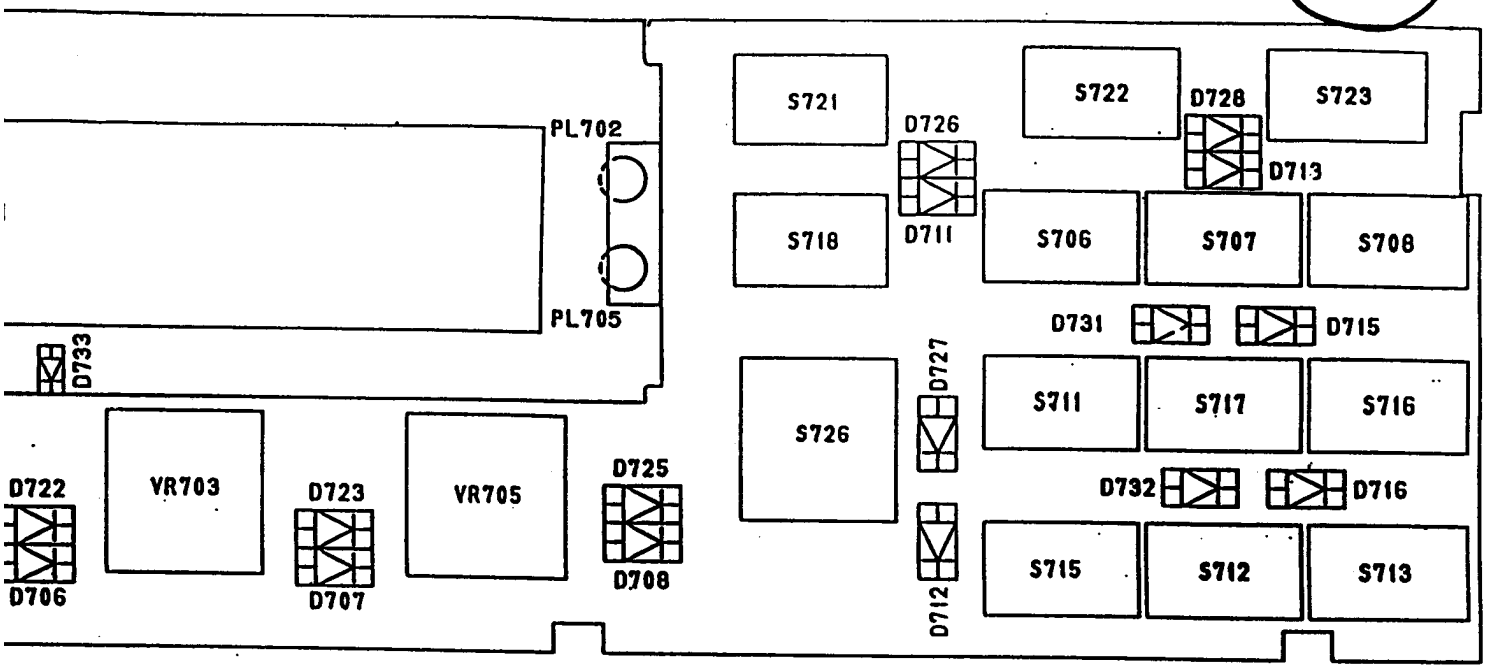

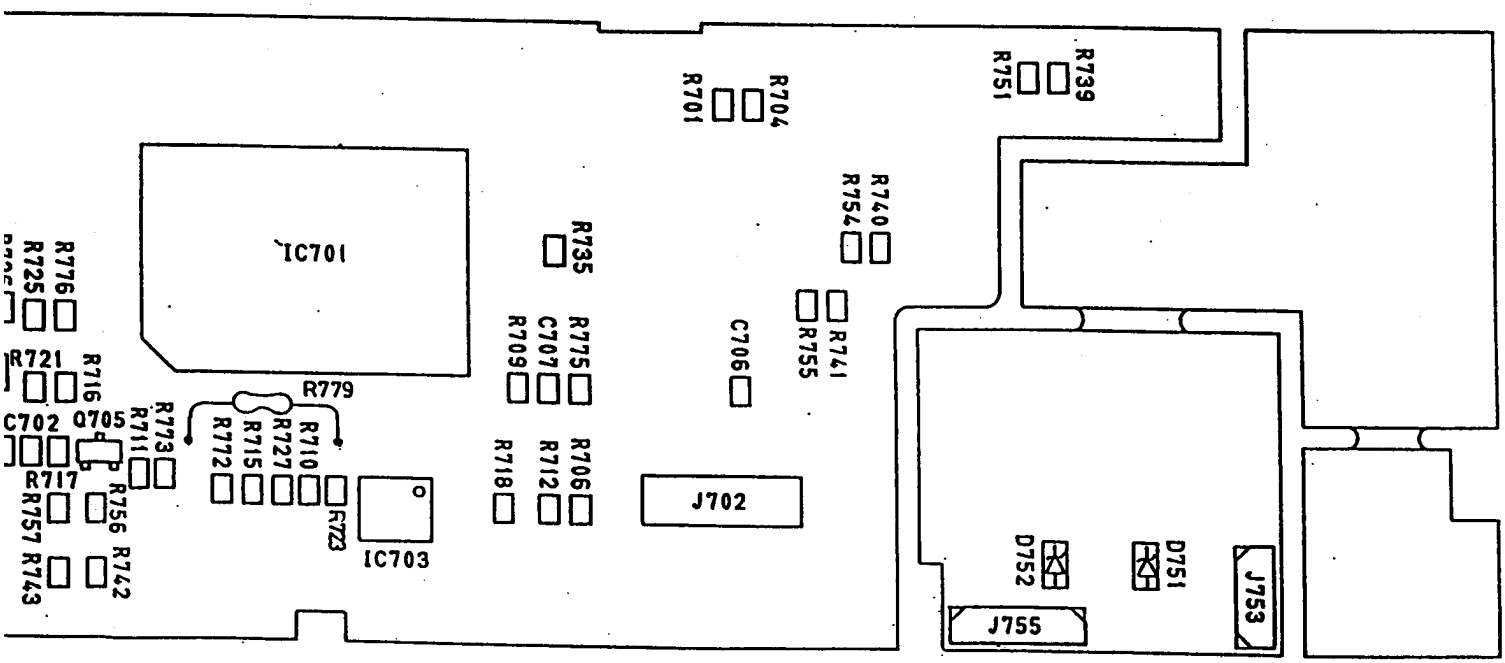

B751 PA-353AA 2/3

B781
PA-353AA 3/3

(5A) (5B)

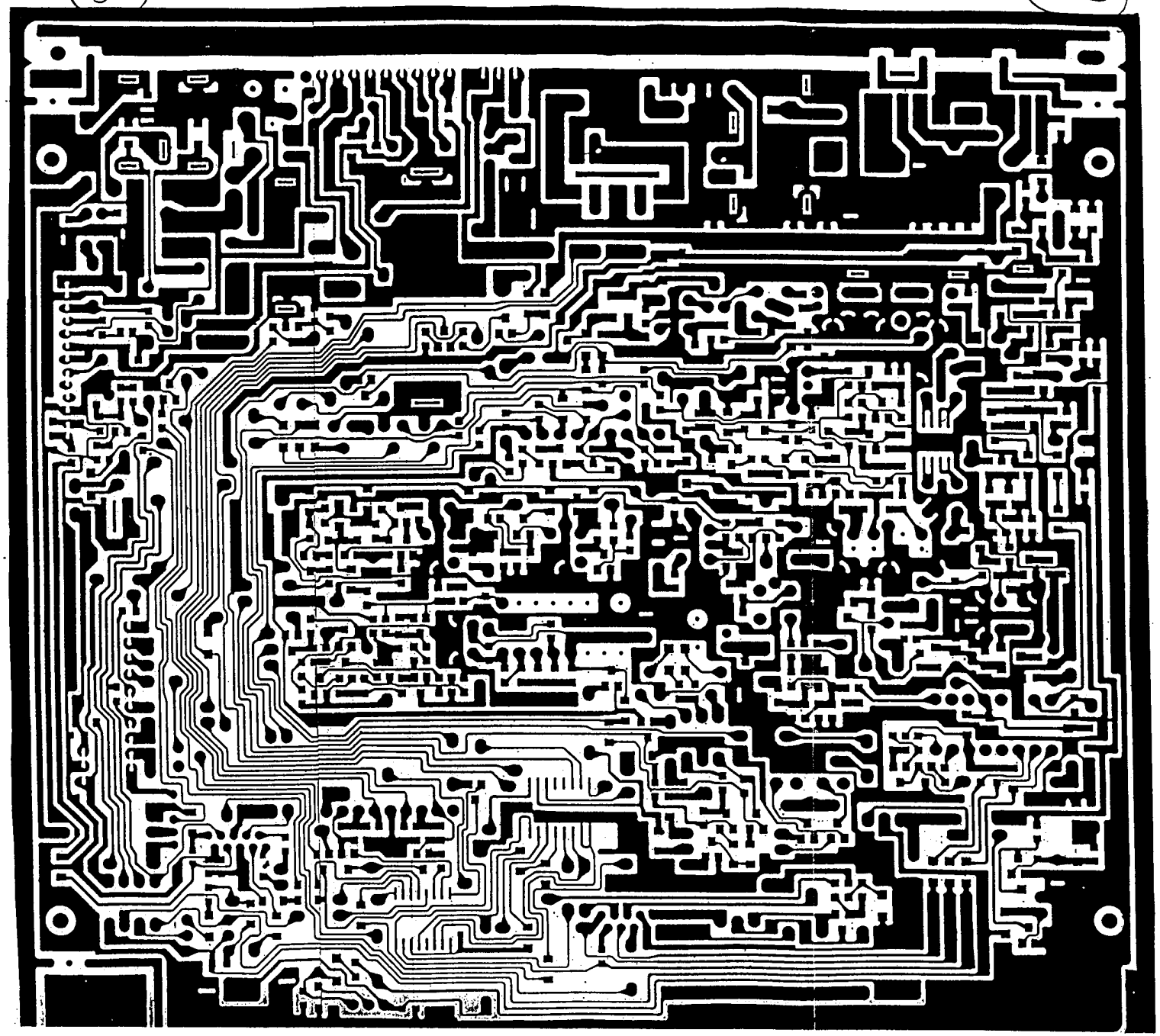

PLATINE PRINCIPALE

(5A)

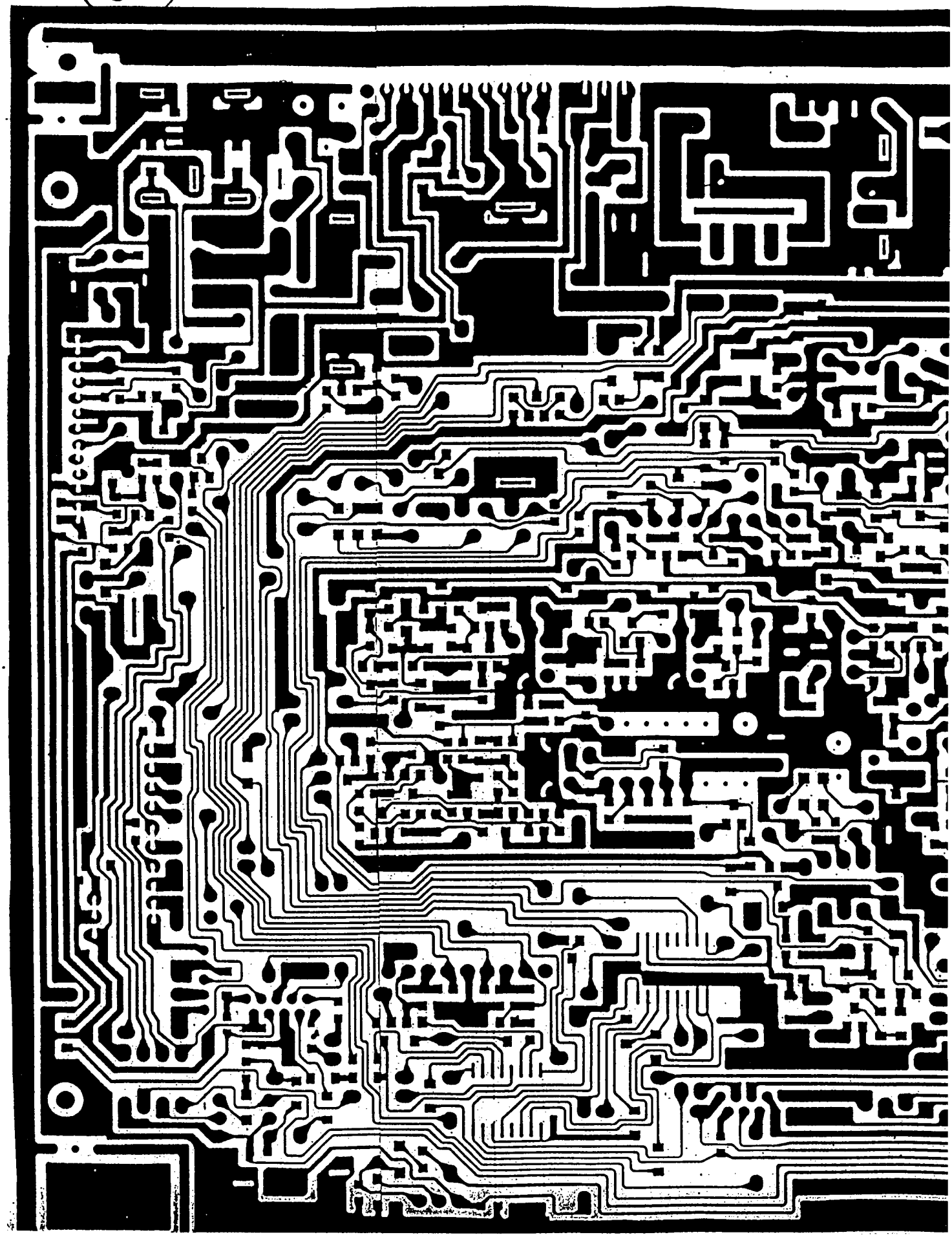

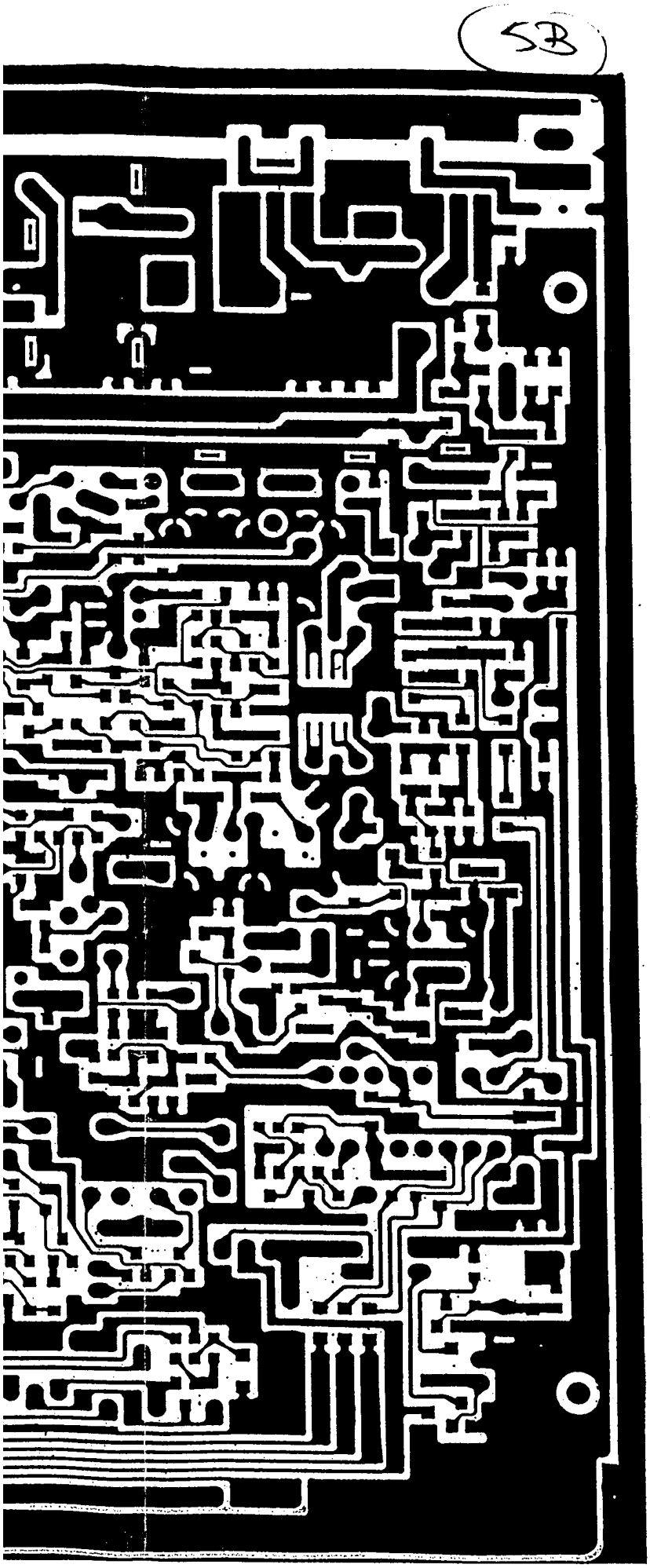

PLATINE PRINCIPALE

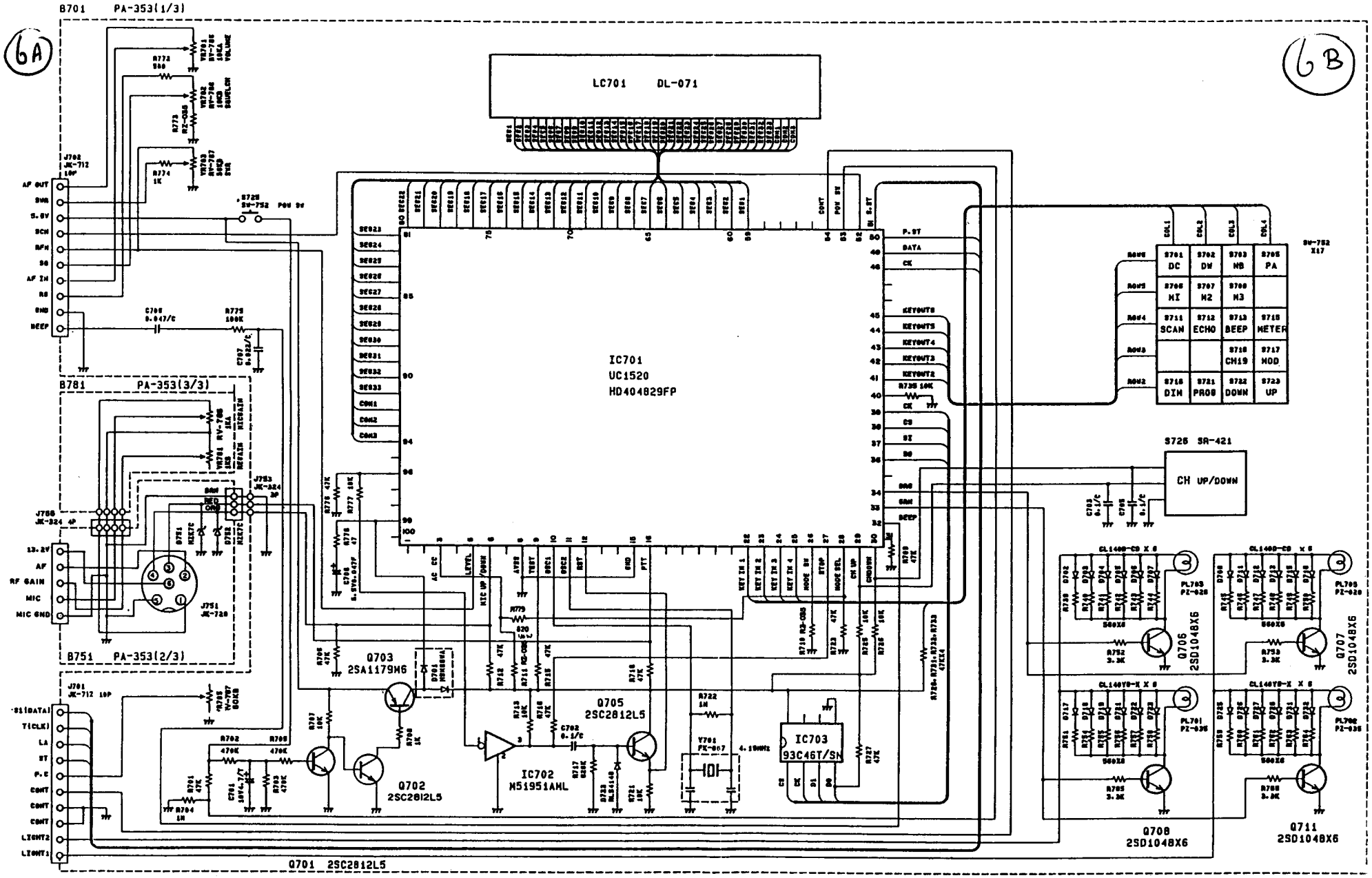

NOTES:

1. RESISTANCE VALUES ARE SHOWN IN OHMS UNLESS OTHERWISE NOTED.
2. RESISTOR WATTAGES ARE 1/10W UNLESS OTHERWISE NOTED.
3. CAPACITANCE VALUES ARE INDICATED IN MICRO FARADS UNLESS OTHERWISE NOTED. (P=MICRO-MICRO FARAD)
4. CHIP PARTS ARE NOT SPECIFIED IN THIS SCHEMATIC DIAGRAM. PLEASE REFER TO THE PARTS LIST FOR THE CHIP PARTS.

DESIGN	DRAWN. BY	UT-341Z	MODEL NO. JAMES
	93.02.05		
	LORNA	TITLE SCHEMATIC DIAGRAM	
CHECK. BY	APPRO. BY		
白石		DRAWING NO. ES2-0325	
93.02.03	Feb. 8. '93		
REV. NO.		P.E.E	

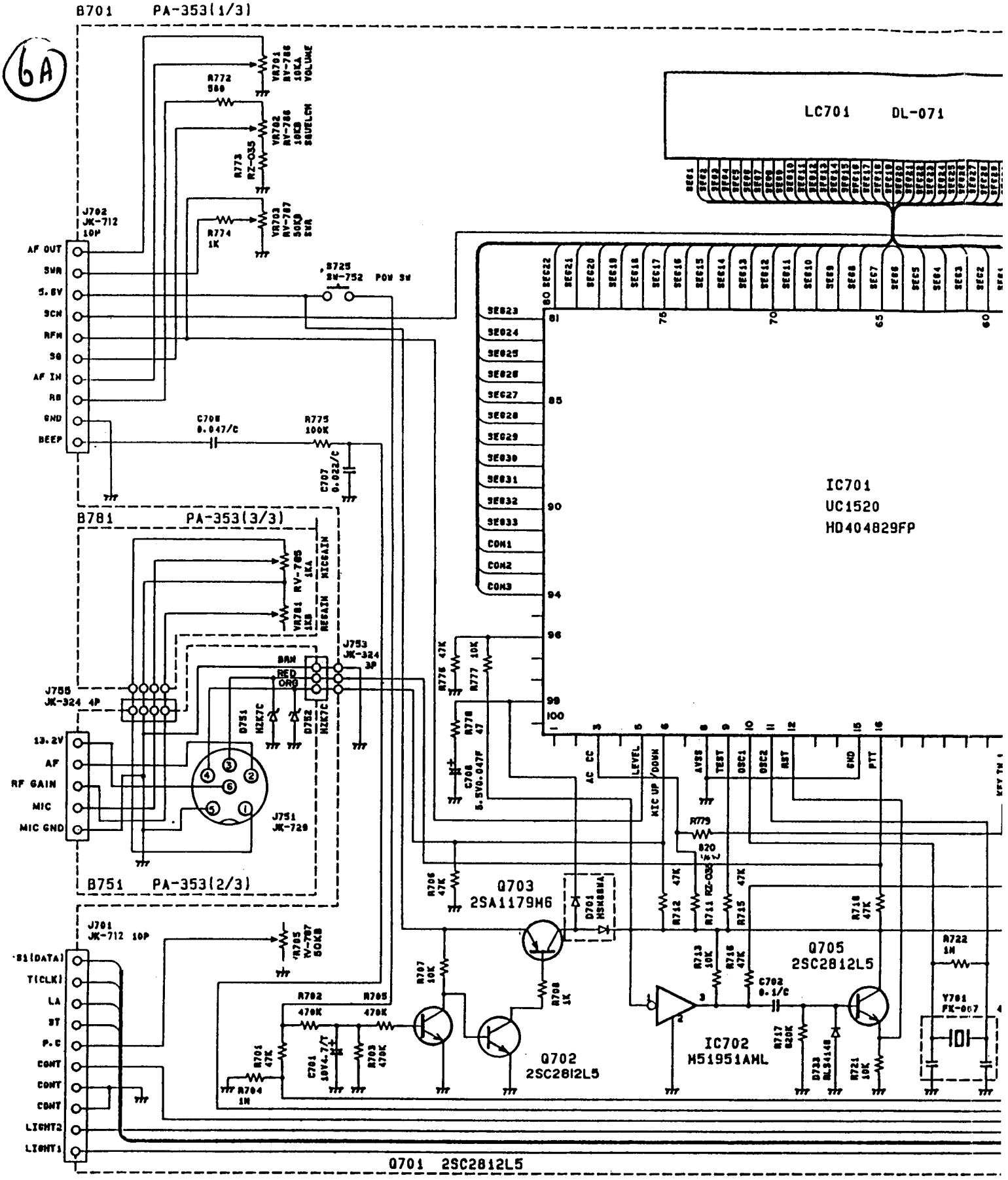

NOTES:

1. RESISTANCE VALUES ARE SHOWN IN OH
   OTHERWISE NOTED.
2. RESISTOR WATTAGES ARE 1/10W
   UNLESS OTHERWISE NOTED.
3. CAPACITANCE VALUES ARE INDICATED
   FARADS UNLESS OTHERWISE NOTED.
   (P=MICRO-MICRO FARAD)

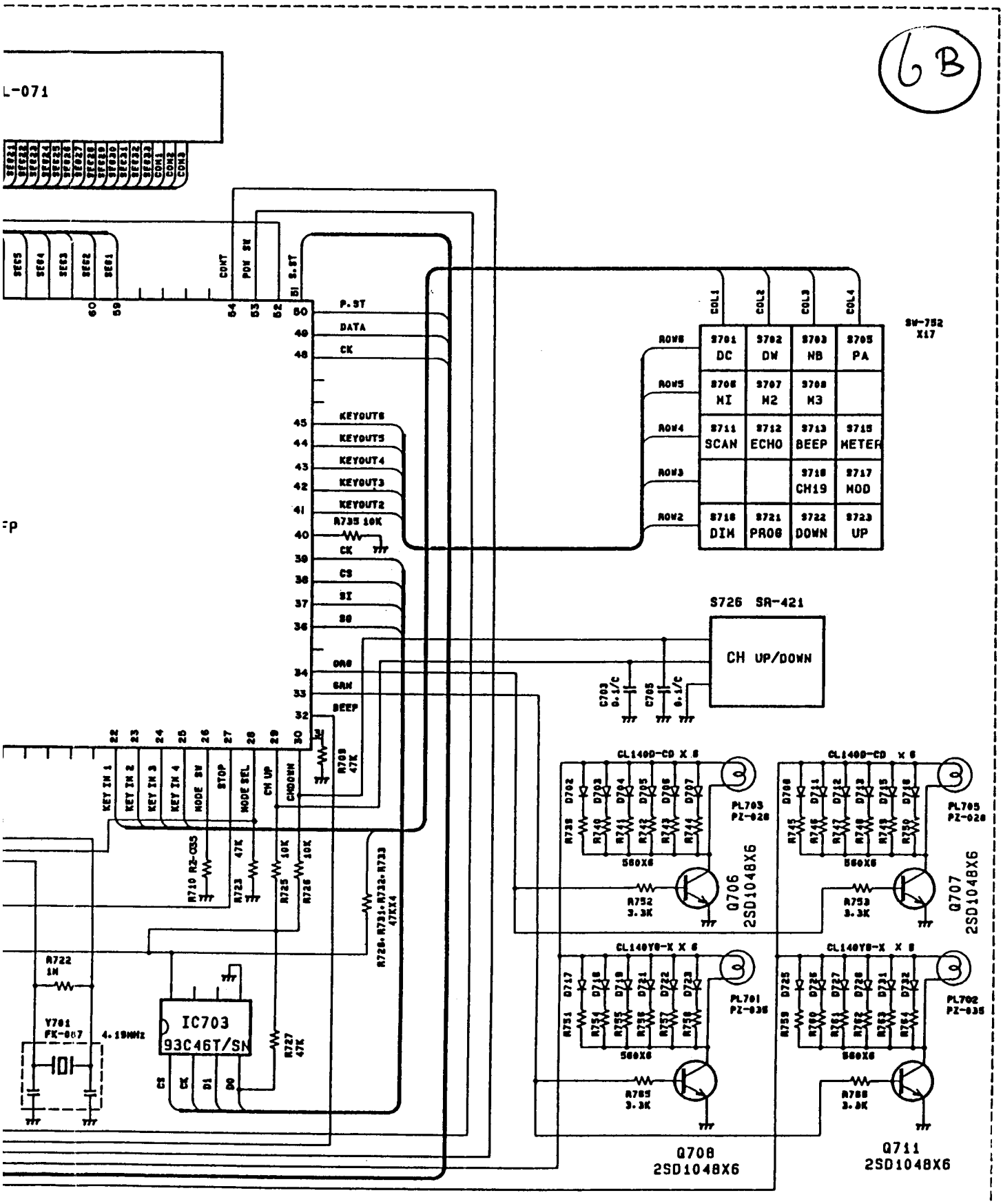

E SHOWN IN OHMS UNLESS

E 1/10W
ED.

RE INDICATED IN MICRO
ISE NOTED.

4. CHIP PARTS ARE NOT SPECIFIED IN THIS SCHEMATIC DIAGRAM.
PLEASE REFER TO THE PARTS LIST FOR THE CHIP PARTS.

DESIGN	DRAWN. BY		MODEL NO.
	93.02.05	UT-341Z	JAMES
	LORNA	TITLE	
CHECK. BY	APPRO. BY	SCHEMATIC DIAGRAM	
김기		DRAWING NO.	
920243	Feb. 8. '93	ES2-0325	
REV. NO.		P.E.E	

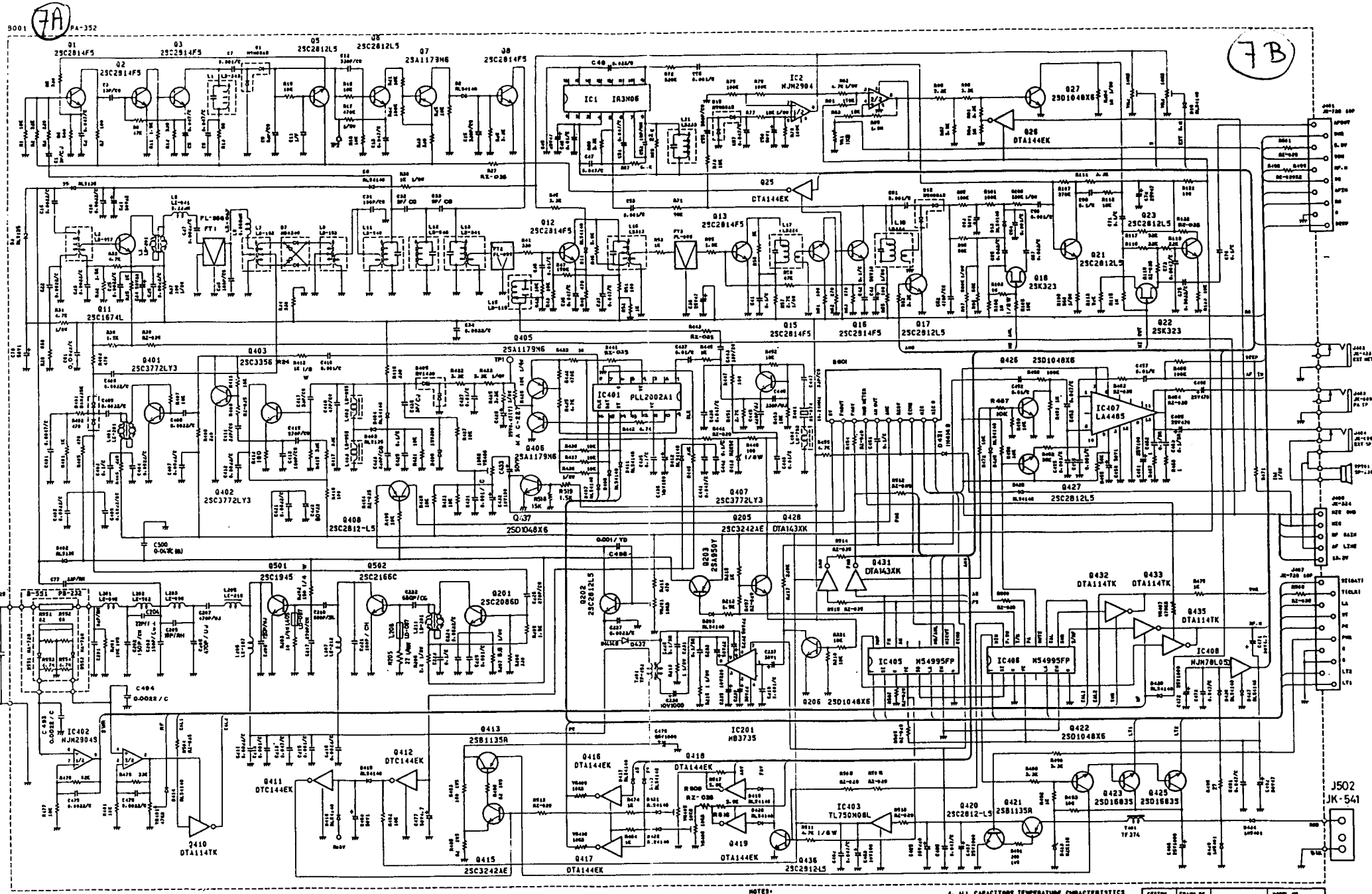
7A
7B
PA-352
Q1 2SC2814F5
Q2 2SC2914F5
Q3 2SC2914F5
Q5 2SC2812L5
Q6 2SC2812L5
Q7 2SA1179M6
Q8 2SC2814F5
IC1 IR3M06
IC2 NJM2904
Q27 2SD1048X6
Q26 DTA144EK
Q25 DTA144EK
Q11 2SC1674L
Q12 2SC2814F5
Q13 2SC2814F5
Q15 2SC2814F5
Q16 2SC2814F5
Q17 2SC2812L5
Q18 2SK323
Q21 2SC2812L5
Q23 2SC2812L5
Q22 2SK323
Q401 2SC3772LY3
Q402 2SC3772LY3
Q403 2SC3356
Q405 2SA1179M6
Q406 2SA1179M6
Q407 2SC3772LY3
Q408 2SC2812-L5
Q437 2SD1048X6
Q205 2SC3242AE
Q428 DTA143XK
IC401 PLL2002A1
IC407 LA4485
Q426 2SD1048X6
Q427 2SC2812L5
Q431 DTA143XK
Q432 DTA114TK
Q433 DTA114TK
Q435 DTA114TK
IC405 M54995FP
IC406 M54995FP
IC408 NJM78L05
Q501 2SC1945
Q502 2SC2166C
Q201 2SC2086D
Q202 2SC2812L5
Q203 2SA950Y
Q206 2SD1048X6
IC402 NJM2904S
Q410 DTA114TK
Q411 DTC144EK
Q412 DTC144EK
Q413 2SB1135R
Q415 2SC3242AE
Q416 DTA144EK
Q417 DTA144EK
Q418 DTA144EK
Q419 DTA144EK
IC201 HB3735
IC403 TL750N08L
Q420 2SC2812-L5
Q421 2SB1135R
Q423 2SD1683S
Q425 2SD1683S
Q436 2SC2812L5
J502 JK-541
J501 JK-429
B-551 PB-232
C 50P 22P/CH
C494 0.0022/C
C493 0.0022/C
C500 0.047K (B)
C498 0.001/YD
R205 22 1/4W
IC 10V1000
TF374
PL-886
FT1
FT2
FT3
FT4
TP1
M.A.C-2.8T
R596 15K
R519 1.5K
R407
R408
R409
R410
R411
R412
R413
R414
R415
R416
R417
R418
R419
R420
R421
R422
R423
R424
R425
R426
R427
R428
R429
R430
R431
R432
R433
R434
R435
R436
R437
R438
R439
R440
R441
R442
R443
R444
R445
R446

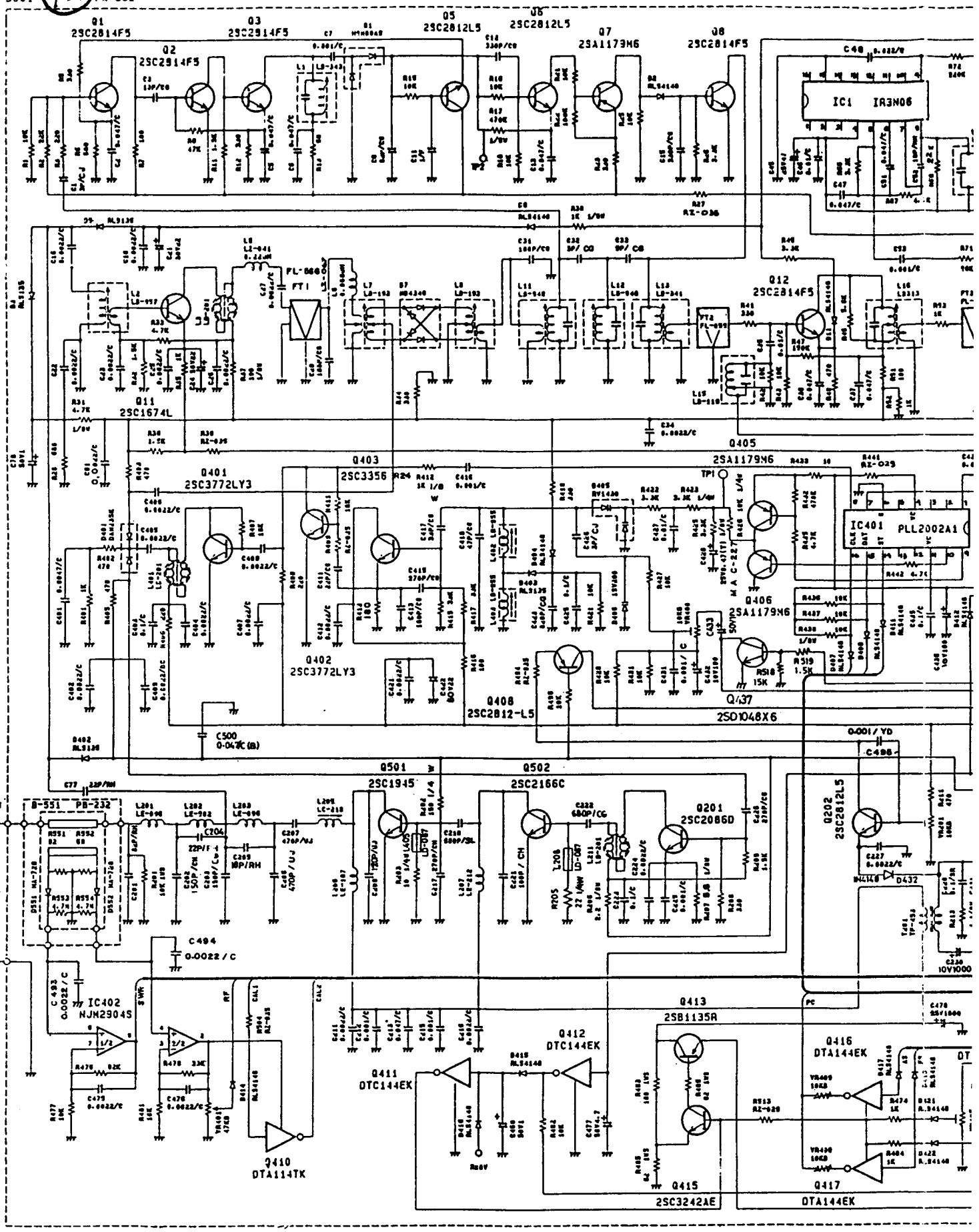
Q1 2SC2814F5
Q2 2SC2814F5
Q3 2SC2814F5
Q5 2SC2812L5
Q6 2SC2812L5
Q7 2SA1179M6
Q8 2SC2814F5
IC1 IR3N06
Q12 2SC2814F5
Q11 2SC1674L
Q405
Q403 2SC3356
Q401 2SC3772LY3
Q402 2SC3772LY3
Q408 2SC2812-L5
Q406 2SA1179M6
Q437 2SD1048X6
IC401 PLL2002A1
Q501 2SC1945
Q502 2SC2166C
Q201 2SC2086D
Q202 2SC2812L5
IC402 NJM2904S
Q410 DTA114TK
Q411 DTC144EK
Q412 DTC144EK
Q413 2SB1135R
Q415 2SC3242AE
Q416 DTA144EK
Q417 DTA144EK

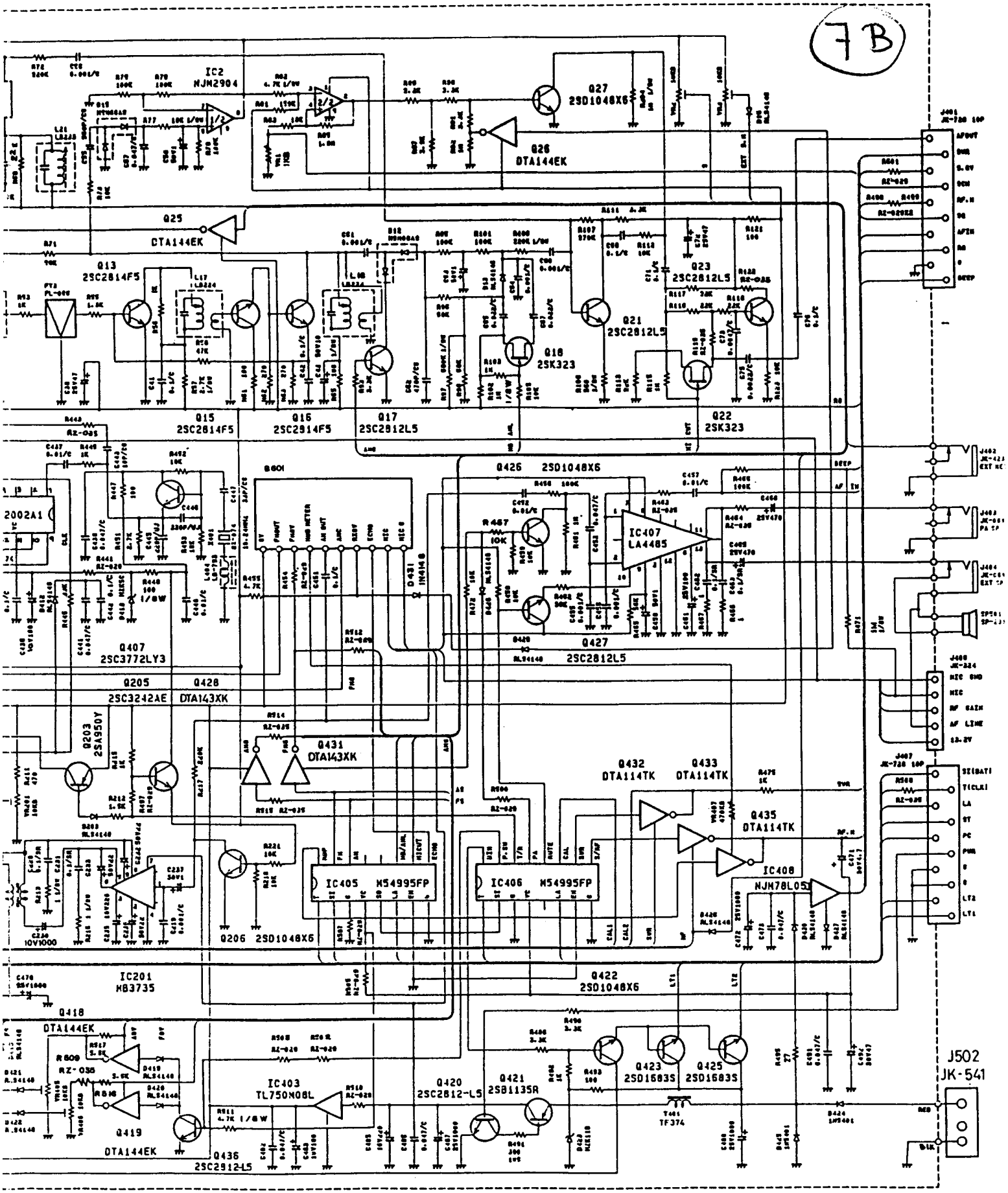

NOTES:

1. RESISTANCE VALUES ARE SHOWN IN OHMS UNLESS OTHERWISE NOTED.
2. RESISTOR WATTAGES ARE 1/10W UNLESS OTHERWISE NOTED.
3. CAPACITANCE VALUES ARE INDICATED IN MICRO FARADS UNLESS OTHERWISE NOTED. (P=MICRO-MICRO FARAD)
4. ALL CAPACITORS TEMPERATURE CHRACTERISTICS ARE SR UNLESS OTHERWISE NOTED.
5. CHIP PARTS ARE NOT SPECIFIED IN THIS SCHEMATIC DIAGRAM. PLEASE REFER TO THE PARTS LIST FOR THE CHIP PARTS.

DESIGN	DRAWN. BY	UT-341	MODEL NO. JAMES
	93.02.08		
	LCRNA	TITLE SCHEMATIC DIAGRAM	
CHECK. BY	APPRO. BY		
Robert H		DRAWING NO. ES2-0326	
92/09/13	Feb. 8. '93		
REV. NO.		P.E.E	

PB601 PB-231

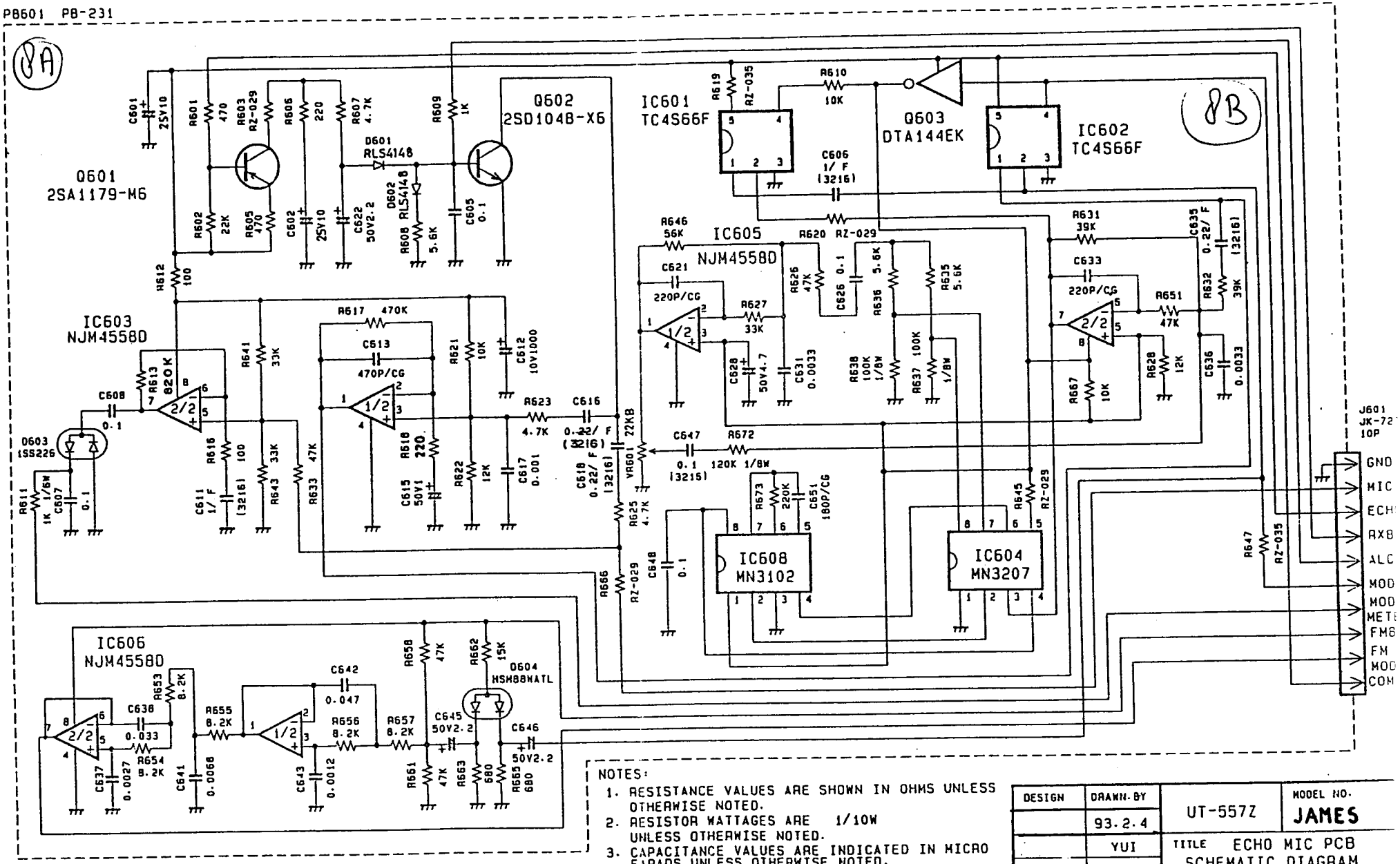

NOTES:

1. RESISTANCE VALUES ARE SHOWN IN OHMS UNLESS OTHERWISE NOTED.
2. RESISTOR WATTAGES ARE 1/10W UNLESS OTHERWISE NOTED.
3. CAPACITANCE VALUES ARE INDICATED IN MICRO FARADS UNLESS OTHERWISE NOTED. (P=MICRO-MICRO FARAD)
4. ALL CAPACITORS TEMPERATURE CHARACTERISTICS ARE B UNLESS OTHERWISE NOTED.
5. CHIP PARTS ARE NOT SPECIFIED IN THIS SCHEMATIC DIAGRAM. PLEASE REFER TO THE PARTS LIST FOR THE CHIP PARTS.

DESIGN	DRAWN. BY	UT-557Z	MODEL NO. JAMES
	93.2.4		
	YUI	TITLE ECHO MIC PCB SCHEMATIC DIAGRAM	
CHECK. BY	APPRO. BY		
		DRAWING NO ES4-0334	
	Feb. 23, '93		
REV. NO.		P.E.E	

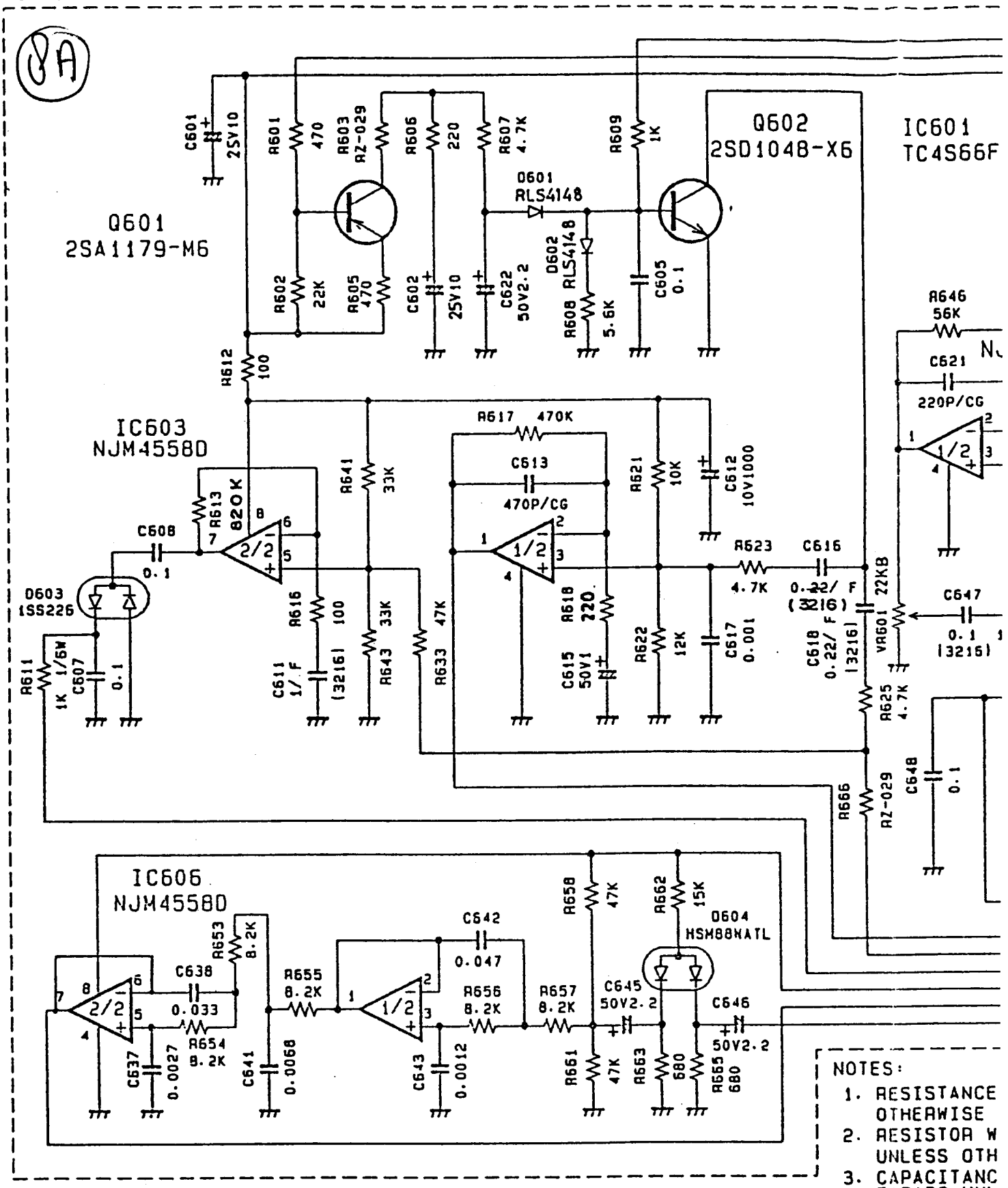
8A
Q601
2SA1179-M6
Q602
2SD1048-X6
IC601
TC4S66F
IC603
NJM4558D
IC606
NJM4558D
D601
RLS4148
D602
RLS4148
D603
1SS226
D604
HSM88WATL
C601 2SV10
R601 470
R603 RZ-029
R606 220
R607 4.7K
R609 1K
R602 22K
R605 470
C602 25V10
C622 50V2.2
R608 5.6K
C605 0.1
R612 100
R613 820K
C608 0.1
R611 1K 1/6W
C607 0.1
R616 100
C611 1/F (3216)
R641 33K
R643 33K
R633 47K
R617 470K
C613 470P/CG
R618 220
C615 50V1
R621 10K
C612 10V1000
R622 12K
C617 0.001
R623 4.7K
C616 0.22/F (3216)
C618 0.22/F (3216)
R625 4.7K
R646 56K
C621 220P/CG
VR601 22KB
C647 0.1 (3216)
C648 0.1
R666 RZ-029
R653 8.2K
C638 0.033
R654 8.2K
C637 0.0027
R655 8.2K
C641 0.0068
C642 0.047
R656 8.2K
C643 0.0012
R657 8.2K
R658 47K
R661 47K
R662 15K
C645 50V2.2
R663 680
R665 680
C646 50V2.2
NOTES:
1. RESISTANCE
OTHERWISE
2. RESISTOR W
UNLESS OTH
3. CAPACITANC
FARADS UNL
(P=MICRO-M
4. ALL CAPACI
ARE B UNL
5. CHIP PARTS
SCHEMATIC
PLEASE REF
THE CHIP P

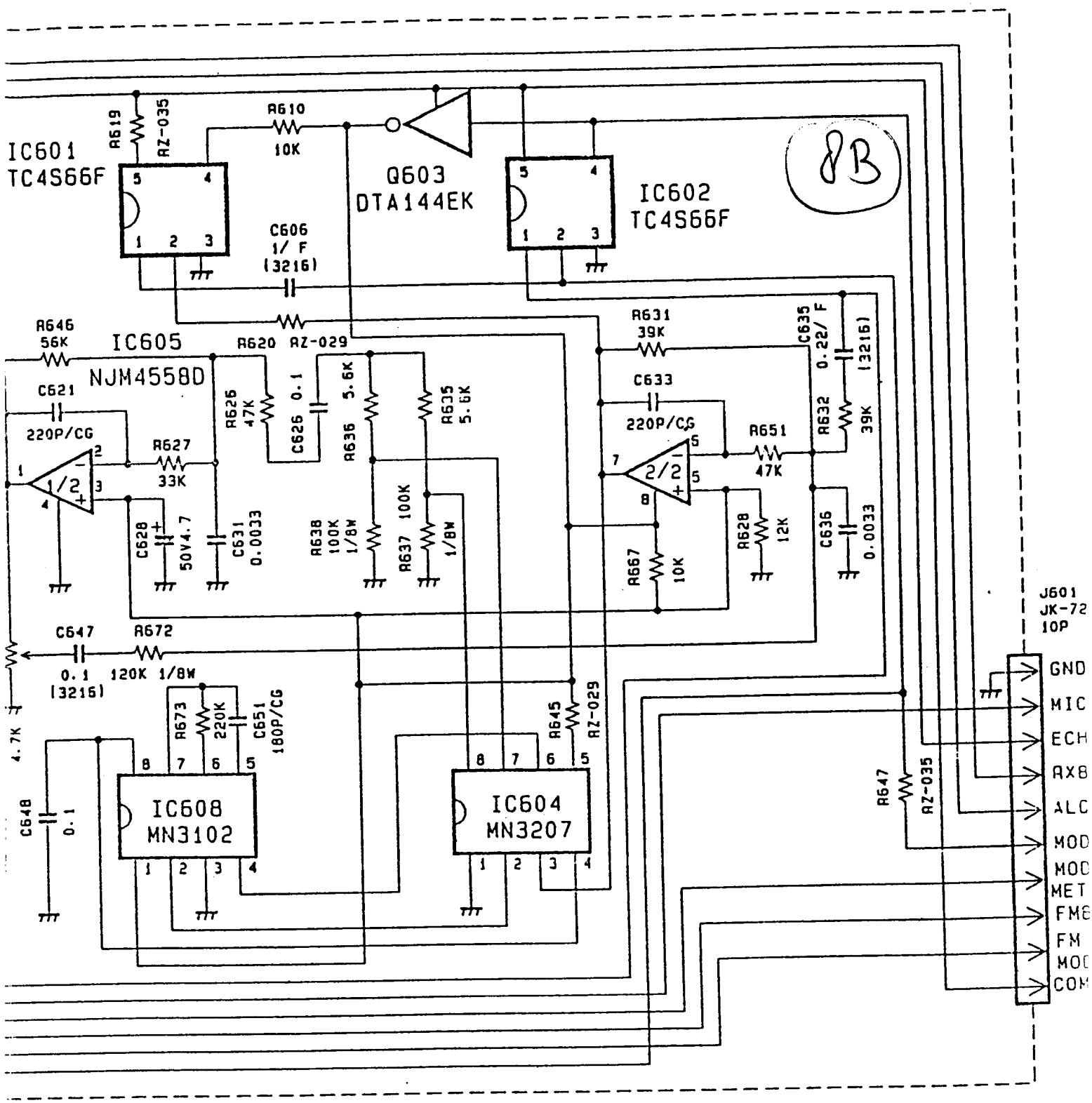

S:
ESISTANCE VALUES ARE SHOWN IN OHMS UNLESS
THERWISE NOTED.
ESISTOR WATTAGES ARE 1/10W
NLESS OTHERWISE NOTED.
APACITANCE VALUES ARE INDICATED IN MICRO
ARADS UNLESS OTHERWISE NOTED.
P=MICRO-MICRO FARAD)
LL CAPACITORS TEMPERATURE CHARACTERISTICS
RE B UNLESS OTHERWISE NOTED.
HIP PARTS ARE NOT SPECIFIED IN THIS
CHEMATIC DIAGRAM.
LEASE REFER TO THE PARTS LIST FOR
HE CHIP PARTS.

DESIGN	DRAWN. BY	UT-557Z	MODEL NO. JAMES
	93.2.4		
	YUI	TITLE ECHO MIC PCB SCHEMATIC DIAGRAM	
CHECK. BY	APPRO. BY		
		DRAWING NO ES4-0334	
	Feb. 23,'93		
REV. NO.			P.E.E

9A

PA-352AA/MAIN ::93:02:01

9B

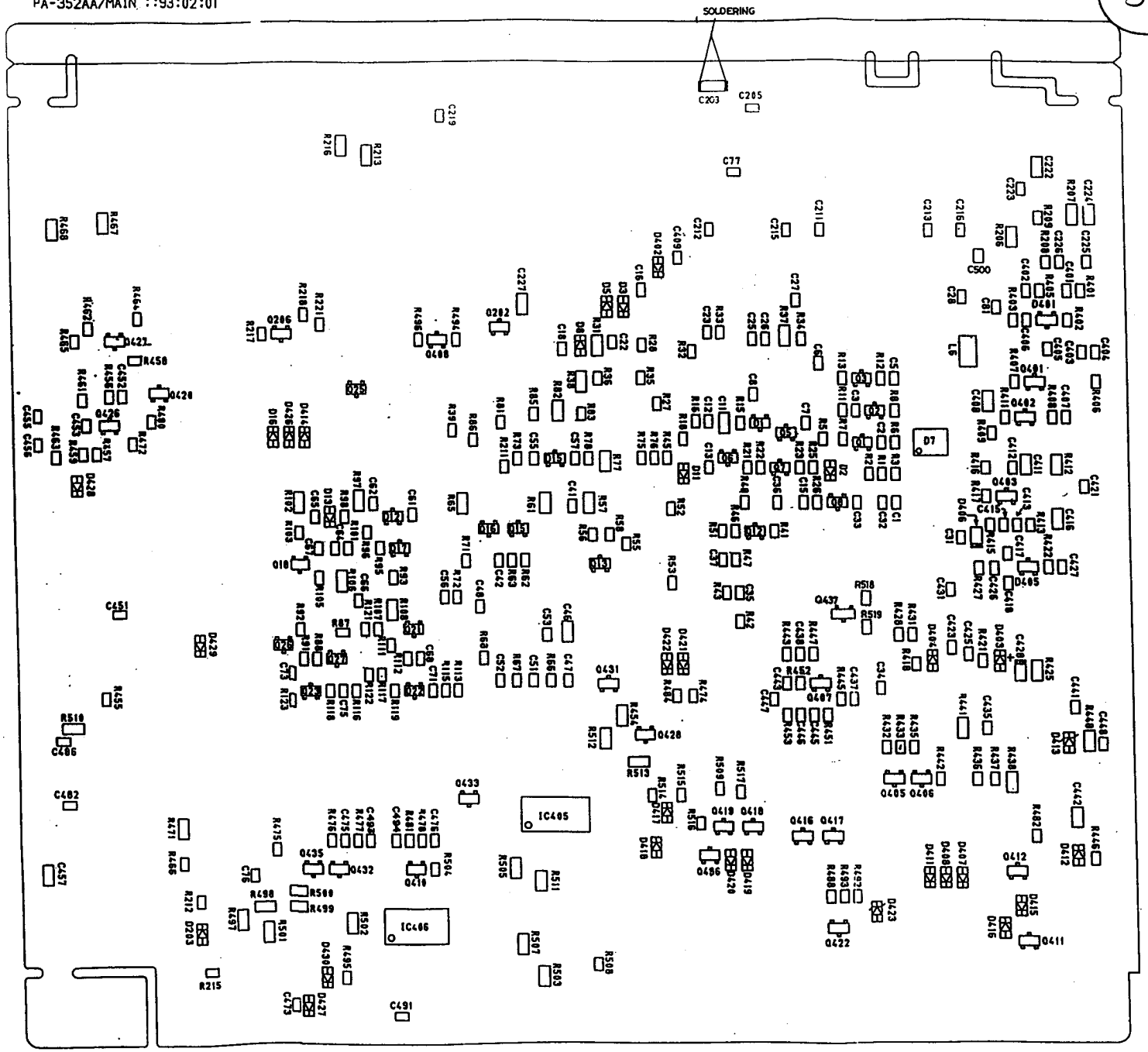

PLATINE PRINCIPALE

Côté soudure

9A

PA-352AA/MAIN ::93:02:01

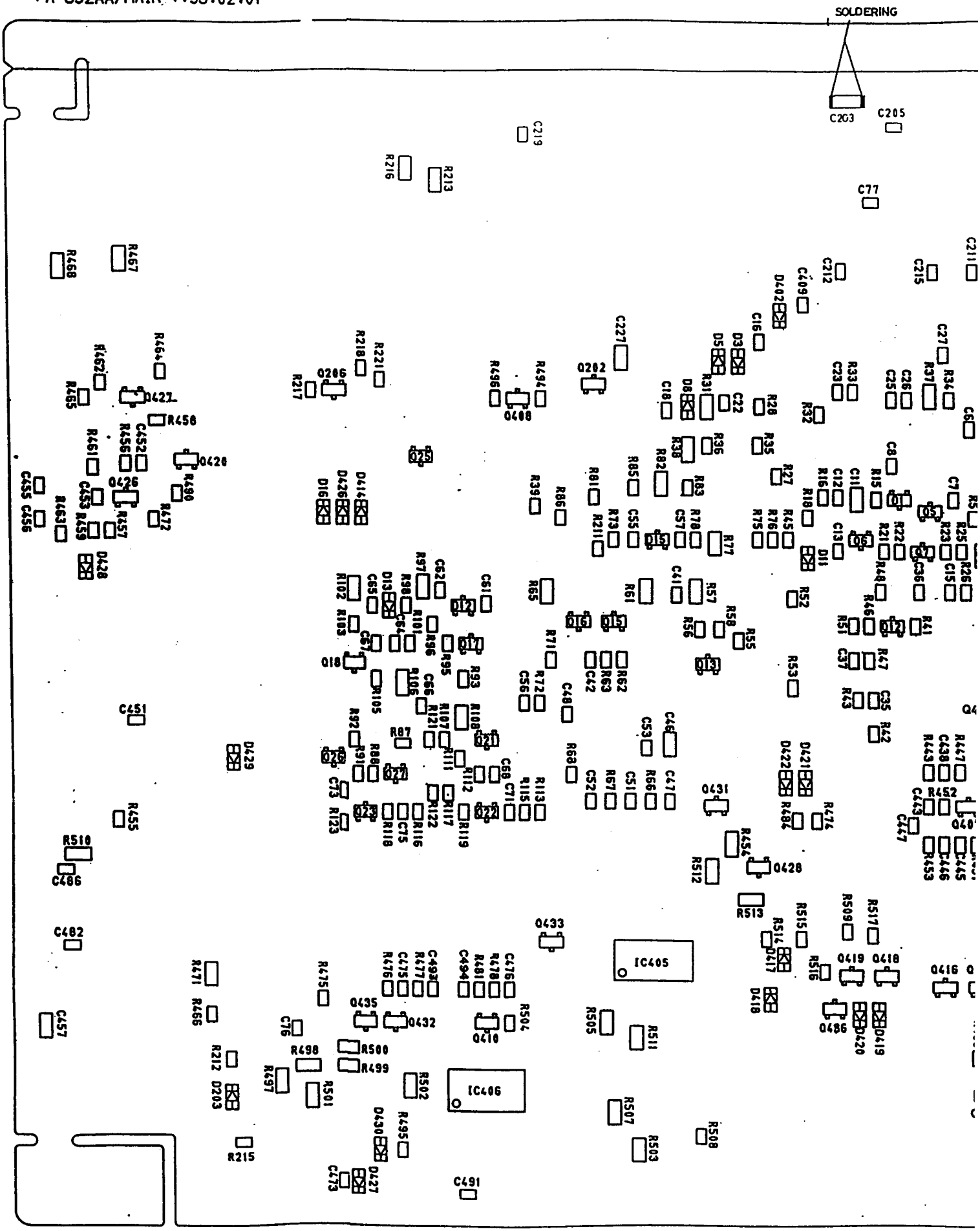

9B

PLATINE PRINCIPALE

Côté soudure

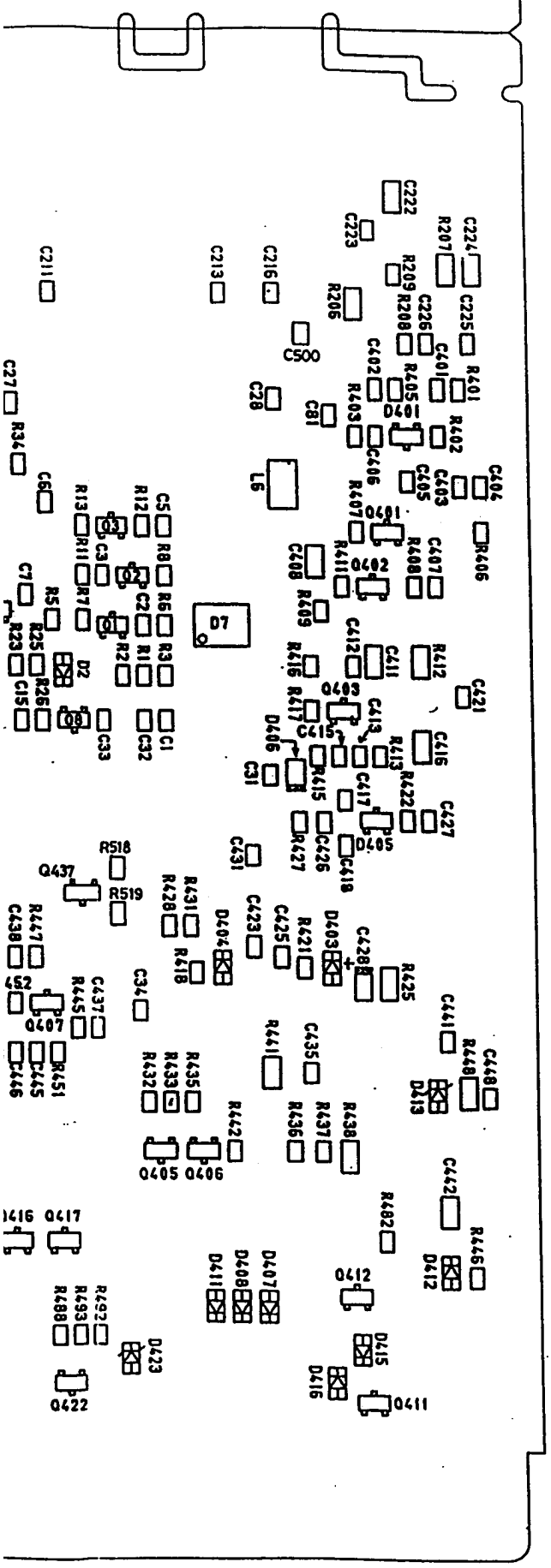

C21	50V22 C-130
C24	50V22 C-130
C38	25V47 C-130
C43	50V10 C-130
C45	25V47 C-130
C58	50V1 C-130
C63	50V1 C-130
C72	25V47 C-130
C78	50V1 C-130
C201	82P/RH
C202	150P/CH
C206	470P/UJ
C207	470P/UJ
C208	120P/RH
C217	270P/CH
C218	680P/SL
C221	100P/CH
C228	0.1(SR)
C230	10V1000 C-130
C231	0.1(SR)
C232	50V22 C-130
C233	50V22 C-130
C235	10V220 C-130
C236	50V22 C-130
C237	50V1 C-130
C422	50V22 C-130
C432	10V100 C-130
C433	50V1 C-130
C436	10V100 C-130
C458	50V1 C-130
C461	25V100 C-130
C462	0.1(SR)
C463	0.1(SR)
C465	25V470 C-130
C466	25V470 C-130
C468	50V1 C-130
C472	25V1000 C-130
C477	50V4.7 C-130
C478	25V1000 C-130
C483	10V100 C-130
C485	16V220 C-130
C487	25V1000 C-130
C488	25V1000 C-130
C492	50V47 C-130
C501	22P/CH
D424	1N5401
D425	1N5401
Q11	2SC1674-L
Q201	2SC2086-D
Q203	2SA950-Y
Q205	2SC3242A-E
Q413	2SB1135R
Q415	2SC3242A-E
Q421	2SB1135R
Q423	2SD1683-S
Q425	2SD1683-S
IC1	1R3N06
IC2	NJM2904S
IC201	MB3735
IC401	PLL2002A1
IC402	NJM2904S
IC407	LA4485
IC408	UPC78L05J

J401	JK-728 10P
J402	JK-423
J403	JK-089
J404	JK-089
J406	JK-324 5P
J407	JK-728 10P
L1	LB343
L2	LB957
L3	LD-201
L5	LZ-041 0.22UH
L7	LD-193
L8	LD-193
L11	LB-948
L12	LB-948
L13	LB-341
L15	LB-119
L16	LB-313
L17	LB-224
L18	LB-224
L21	LB233
L201	LE-096 8 1/2T
L202	LE-302 9 1/2T
L203	LE-096 8 1/2T
L205	LC-218
L206	LE-187 7T
L207	LE212 2 1/2T
L208	LD-087
L211	LD-201
L401	LD-201
L402	LB-955
L403	LB-955
L404	LB-793
L405	LD-087
X401	QX-074 10.240
R17	470K 1/6W
R201	10K 1WS
R202	150
R203	10
R423	3.9K
R426	10K
R483	180 1WS
R485	82 1WS
R486	82 1WS
R491	390 1WS
R205	22
VR1	RT-528 1KB
VR2	RT-528 10KB
VR3	RT-528 10KB
VR201	RT-528 10KB
VR400	RT-528 10KB
VR401	RT-528 47KB
VR405	RT-528 10KB
VR406	RT-528 10KB
VR407	RT-528 470KB
VR408	RT-528 10KB
VR409	RT-528 10KB

T201	TF-453
T401	TF-374
FT001	FL-566
FT002	FL-055
FT003	FL-066
JV1	12.5
JV2	10
JV3	5
JV4	17.5
JV5	7.5
JV6	7.5
JV7	15
JV8	15
JV9	15
JV10	10
JV11	5
JV12	17.5
JV13	15
JV14	15
JV15	7.5
JV16	7.5
JV17	7.5
JV18	15
JV19	12.5
JV20	17.5
JV21	20
JV22	25
JV23	20
JV24	7.5
JV26	15
JV27	7.5
JV28	12.5
JV29	10
JV30	20
JV31	20
JV32	5
JV33	10
JV34	10
JV36	27.5
JV37	15
JV38	15
JV39	30
JV40	17.5
JV41	7.5
JV42	27.5
JV43	12.5
JV44	5
JV47	5
JV48	20
JV49	15
JV50	5
JV51	5
JV52	25
JV53	25
JV54	7.5
JV55	12.5
JV56	22.5
JV57	10
JV58	15
JV59	17.5
JV60	7.5
JV61	7.5
JV62	7.5
JV63	7.5
JV64	5
JV65	7.5

JV66	7.5
JV67	10
JV68	10
JV69	7.5
JV70	10
JV71	10
JV72	17.5
JV73	12.5
JV74	10
JV75	7.5
JV76	17.5
JV77	7.5
JV78	12.5
JV79	7.5
JV82	15
JV83	10
JV84	17.5
JV85	15
JV87	10
JV88	10
JV89	15
JV90	7.5
JV91	5
JV92	12.5
JV93	7.5
JV94	12.5
JV95	12.5
JV96	12.5
JV97	12.5
JV98	15
JV99	7.5
JV100	7.5
JV101	7.5
JV102	7.5
JV103	5
JV104	7.5
JV105	15
JV106	7.5
JV107	7.5
JV108	17.5
JV109	7.5
JP2	10
~~JP3~~	~~7.5~~
~~JP4~~	~~7.5~~
JP5	10
~~JP6~~	~~12.5~~
JP7	20
JP8	30
~~JP9~~	~~7.5~~
JP10	22.5

NOTES:
1. RESISTANCE VALUES ARE SHOWN IN OHMS UNLES OTHERWISE NOTED.
2. RESISTOR WATTAGES ARE 1/4 W UNLESS OTHERWISE NOTED.
3. CAPACITANCE VALUES ARE INDICATED IN MICRO FARADS UNLESS OTHERWISE NOTED. (P=MICRO-MICRO FARAD)

DESIGN	DRAWN. BY	UT-341Z	MODEL NO. JAMES
	NORIE R.	TITLE MAIN PCB	
CHECK. BY	APPRO. BY	PARTS ASS'Y TOP VIE	
		DRAWING NO. EM2-0961	
REV. NO.			PHILS. IN

/\/\/\/\ — APPLY BOND LOCK

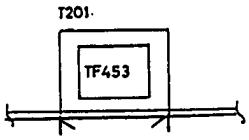

CUT LEGS OF T201 LEAVING 5mm. FROM PCB. EDGE THEN BEND.

10A

10B JAMES

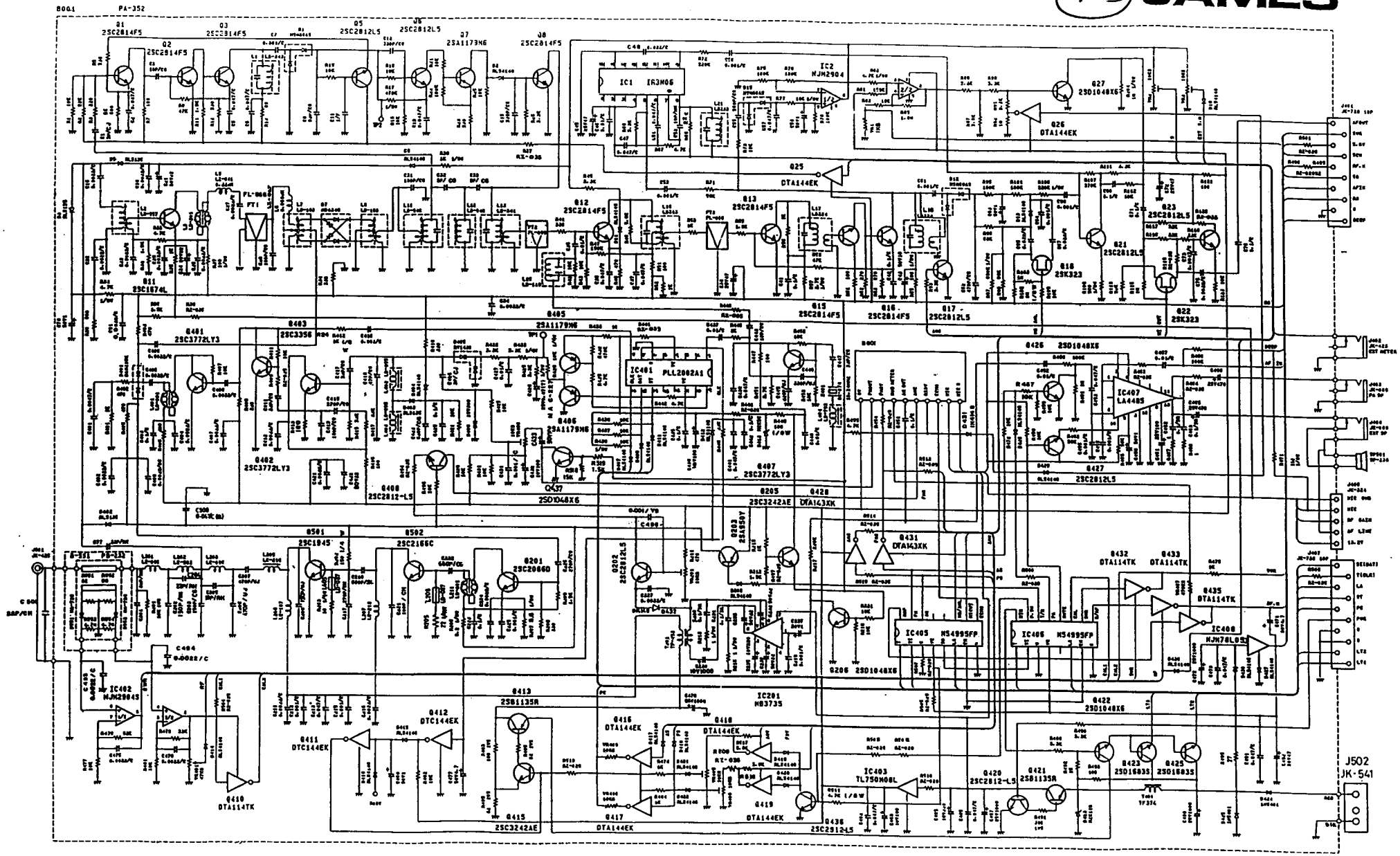

10A

B001 PA-352

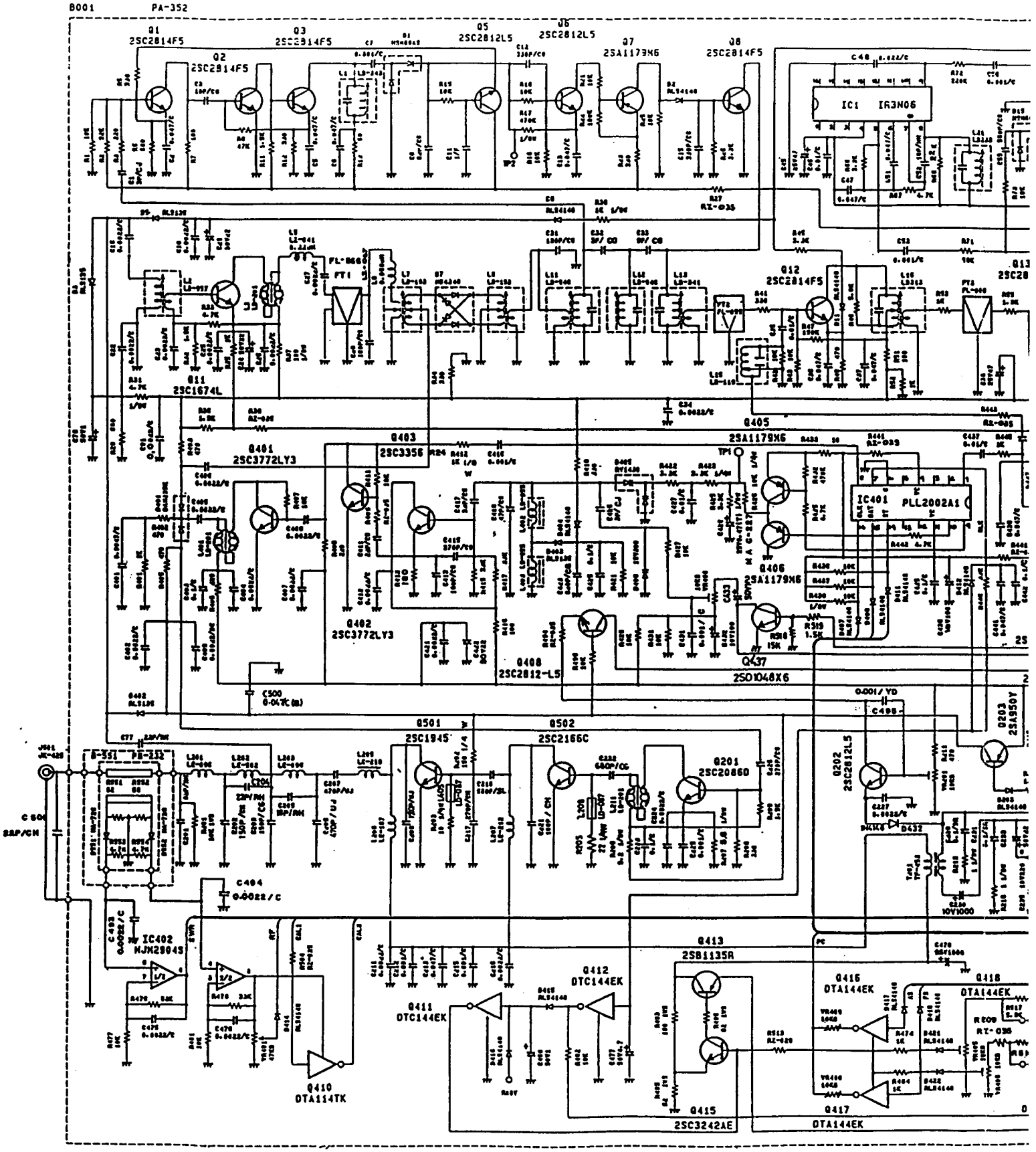

10B

JAMES

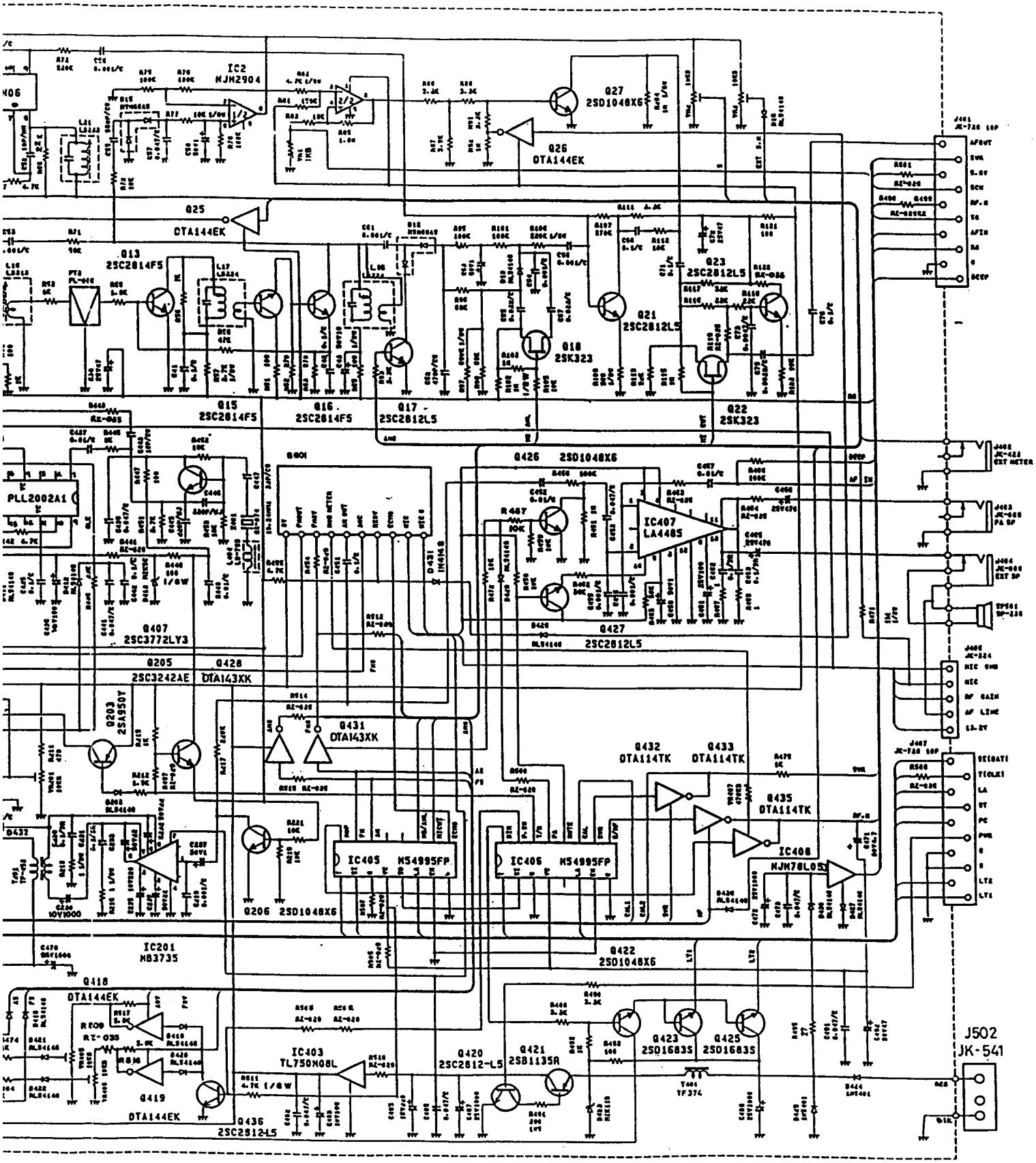
IC2
NJM2904
Q27
2SD1048X6
Q26
DTA144EK
Q25
DTA144EK
Q13
2SC2814F5
Q23
2SC2812L5
Q21
2SC2812L5
Q18
2SK323
Q15
2SC2814F5
Q16
2SC2814F5
Q17
2SC2812L5
Q22
2SK323
Q426
2SD1048X6
PLL2002A1
IC407
LA4485
Q427
2SC2812L5
Q407
2SC3772LY3
Q205
2SC3242AE
Q428
DTA143XK
Q203
2SA950Y
Q431
DTA143XK
Q432
DTA114TK
Q433
DTA114TK
Q435
DTA114TK
IC405
M54995FP
IC406
M54995FP
IC408
NJM78L05
Q206
2SD1048X6
IC201
MB3735
Q422
2SD1048X6
Q418
DTA144EK
IC403
TL750M08L
Q420
2SC2812-L5
Q421
2SB1135R
Q423
2SD1683S
Q425
2SD1683S
Q419
DTA144EK
Q436
2SC2812-L5
J502
JK-541

11A

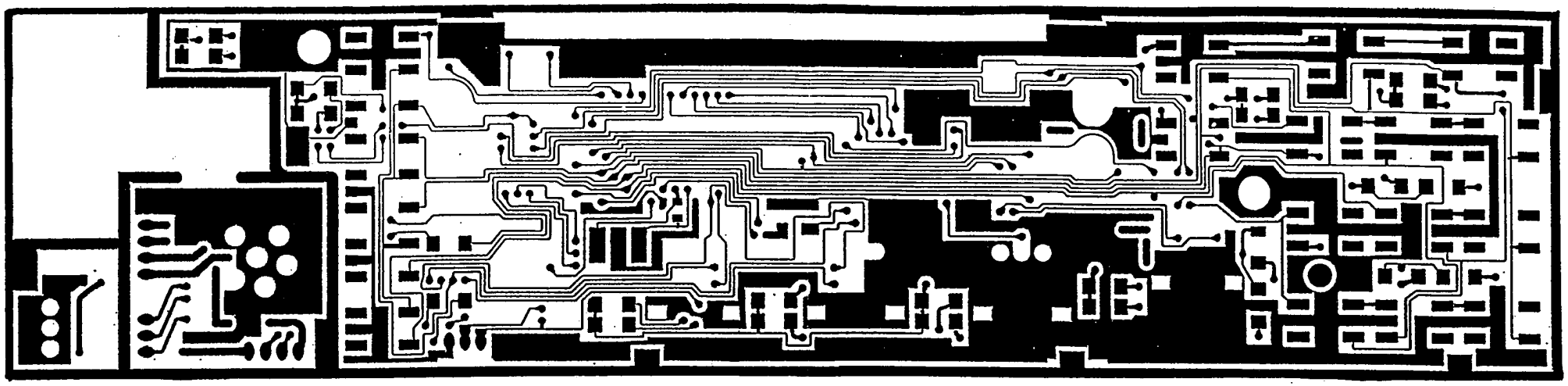

11B

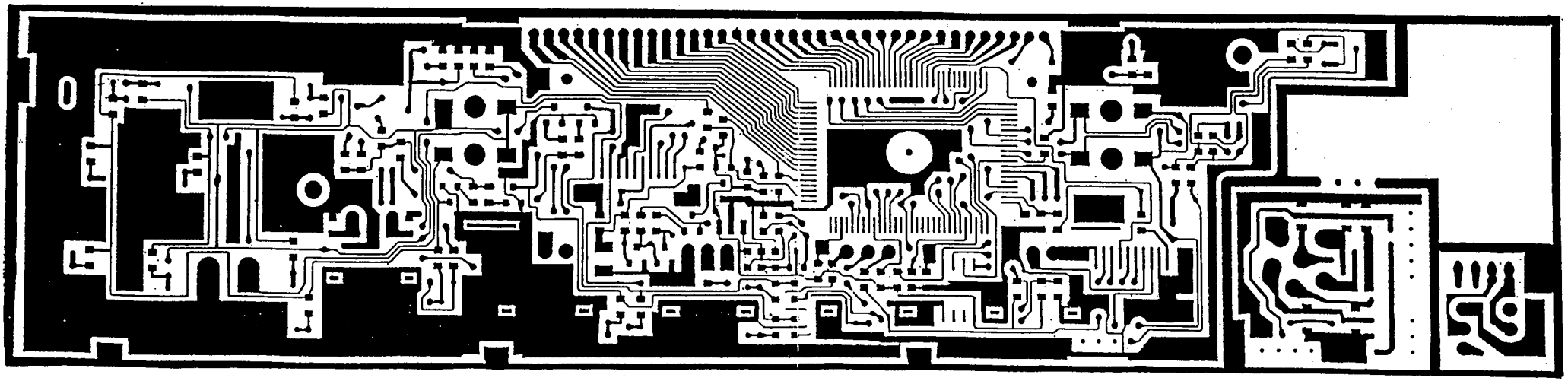

11A

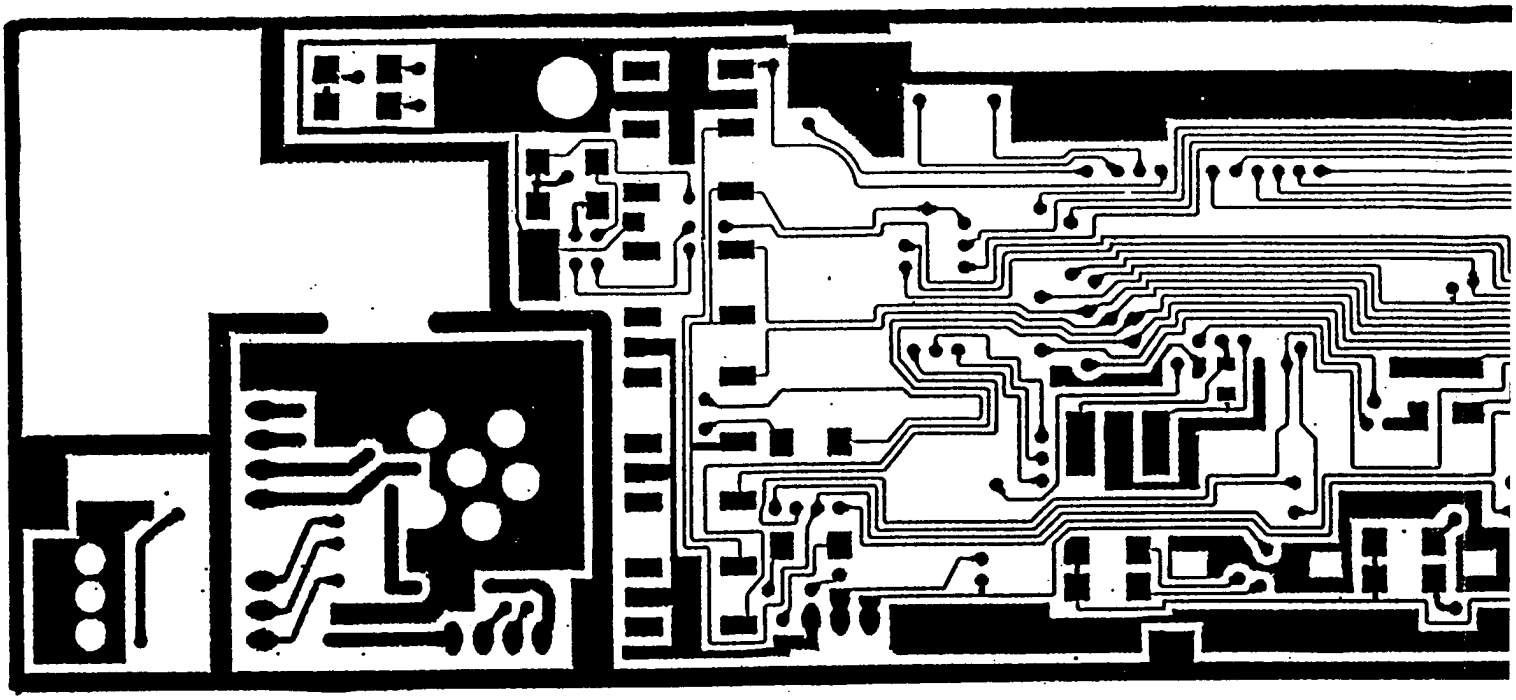

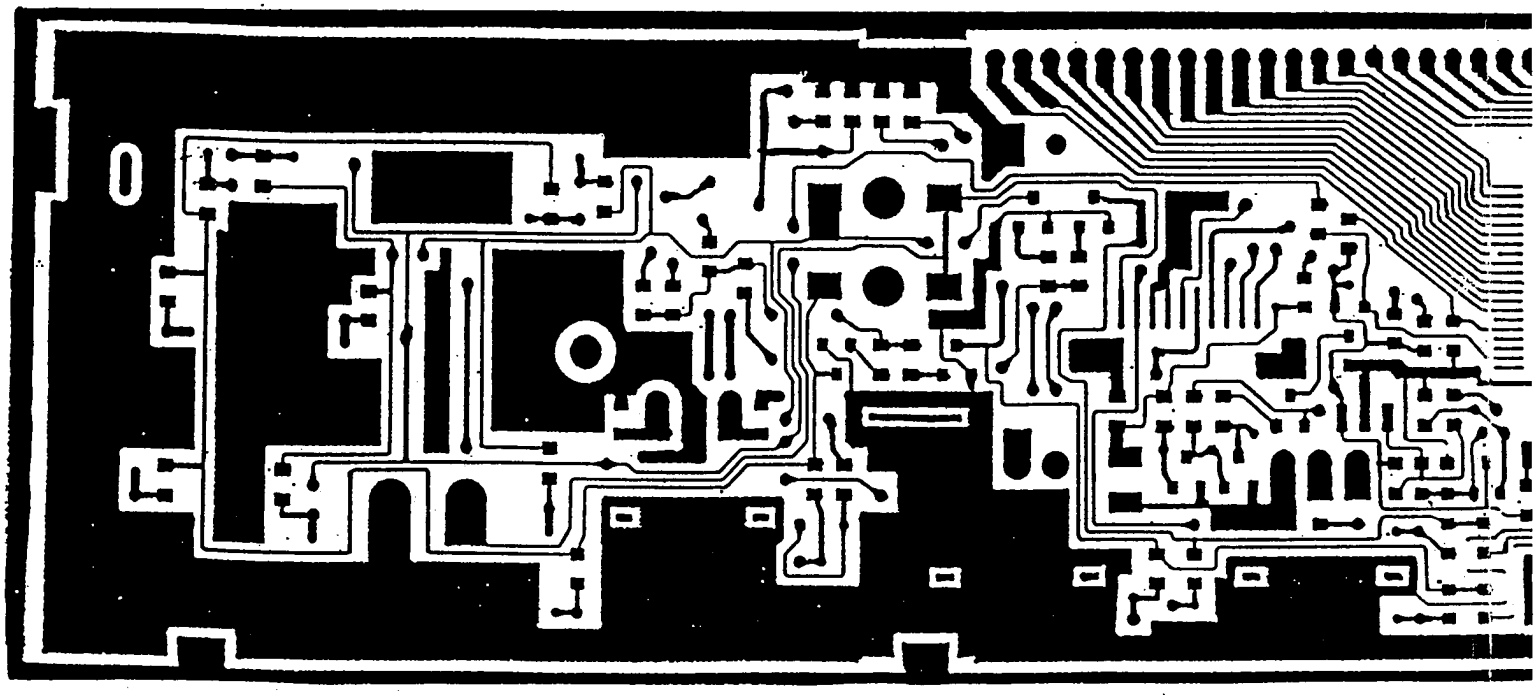

11B

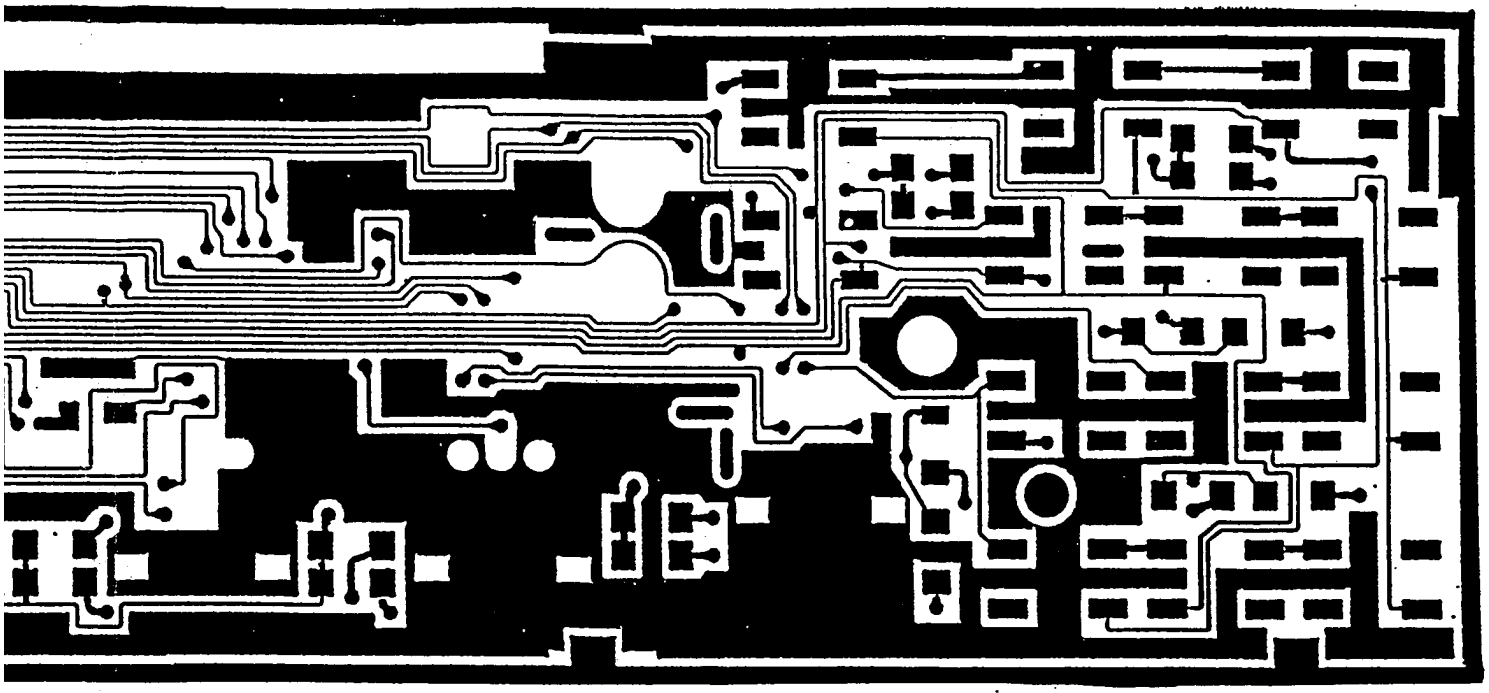

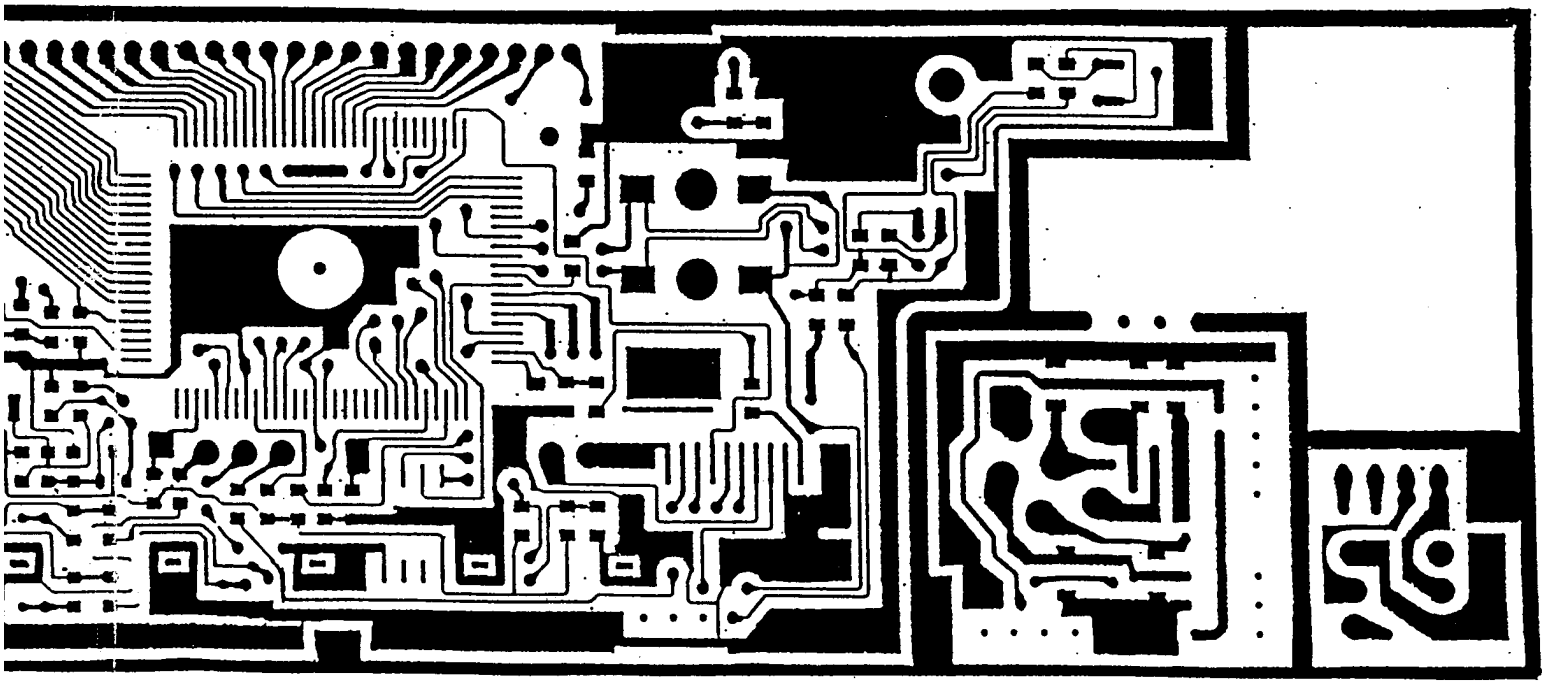

12 A

12 B

SCHEMA DE CABLAGE

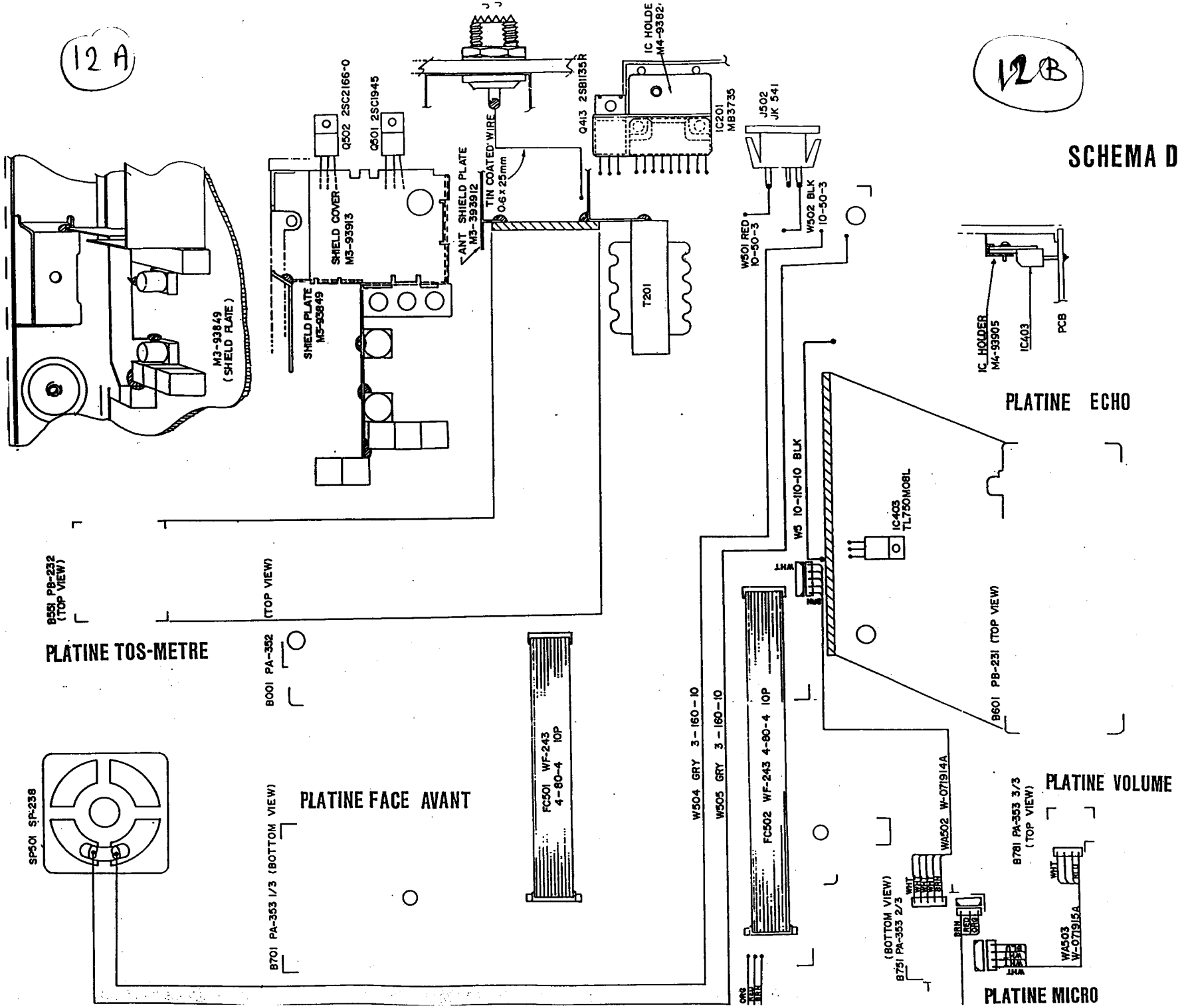

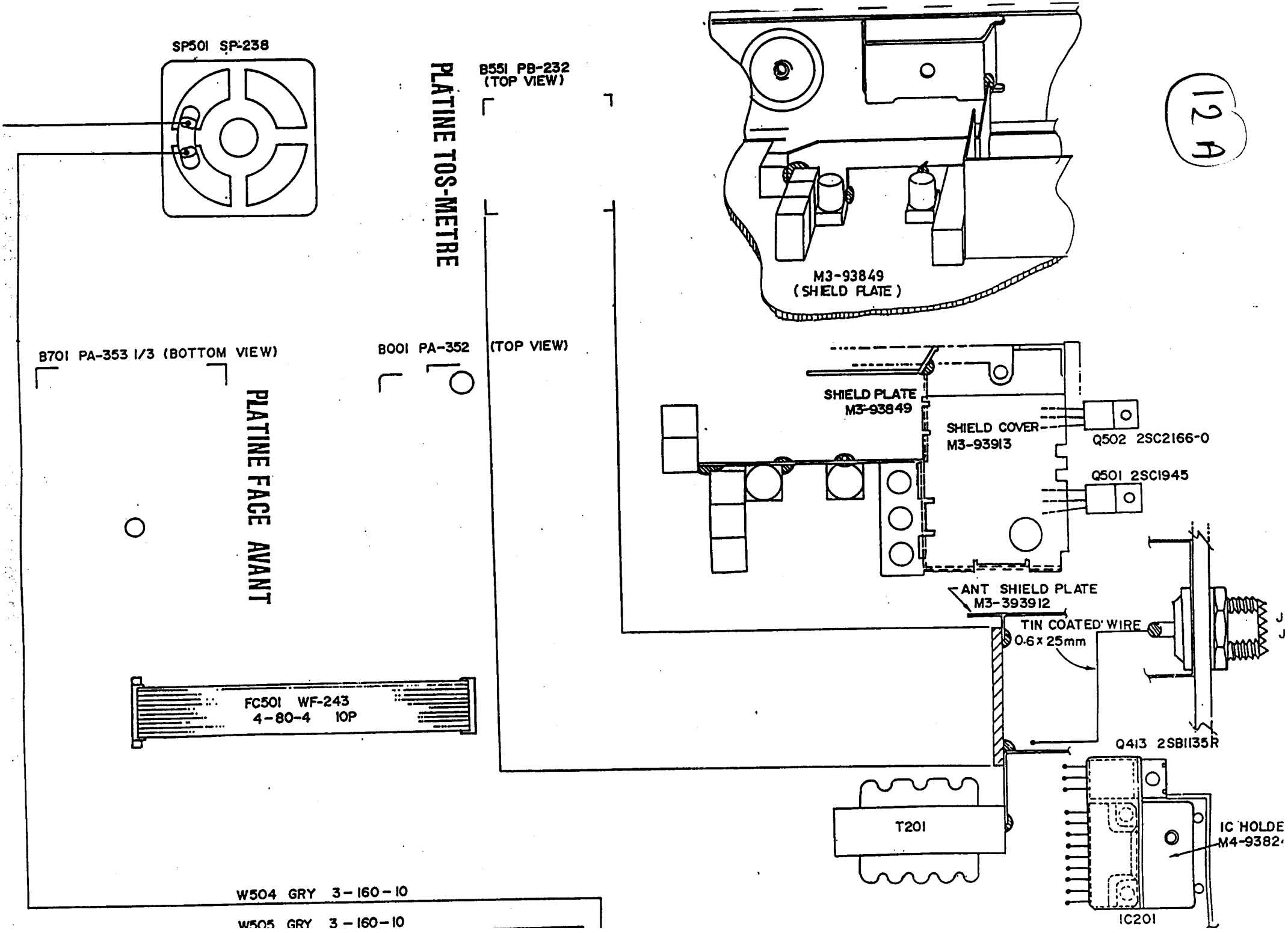
12 A
SP501 SP-238
PLATINE TOS-METRE
B551 PB-232
(TOP VIEW)
M3-93849
(SHIELD PLATE)
B701 PA-353 1/3 (BOTTOM VIEW)
B001 PA-352
(TOP VIEW)
PLATINE FACE AVANT
SHIELD PLATE
M3-93849
SHIELD COVER
M3-93913
Q502 2SC2166-0
Q501 2SC1945
ANT SHIELD PLATE
M3-393912
TIN COATED WIRE
0.6 x 25mm
FC501 WF-243
4-80-4 10P
Q413 2SB1135R
T201
IC HOLDE
M4-9382
IC201
W504 GRY 3-160-10
W505 GRY 3-160-10

12B

SCHEMA DE CABLAGE

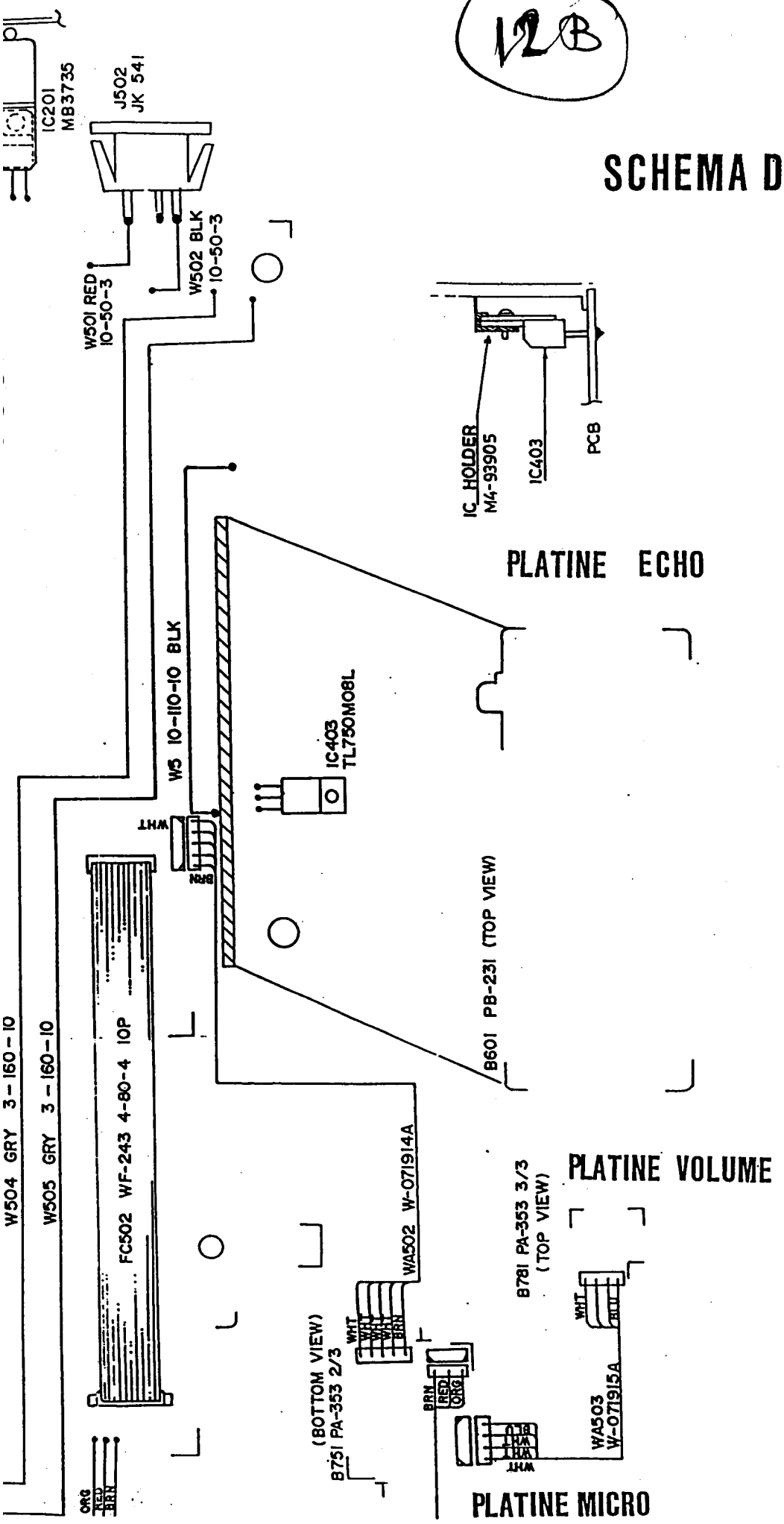

JAMES MEASUREMENT READINGS

* OSCILLOGRAMS

* VOLTAGE OF INTEGRATED CIRCUITS AND TRANSISTORS

13B

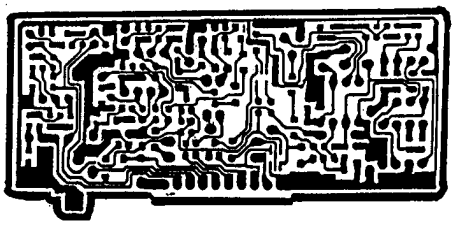

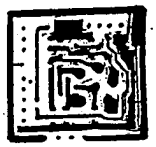

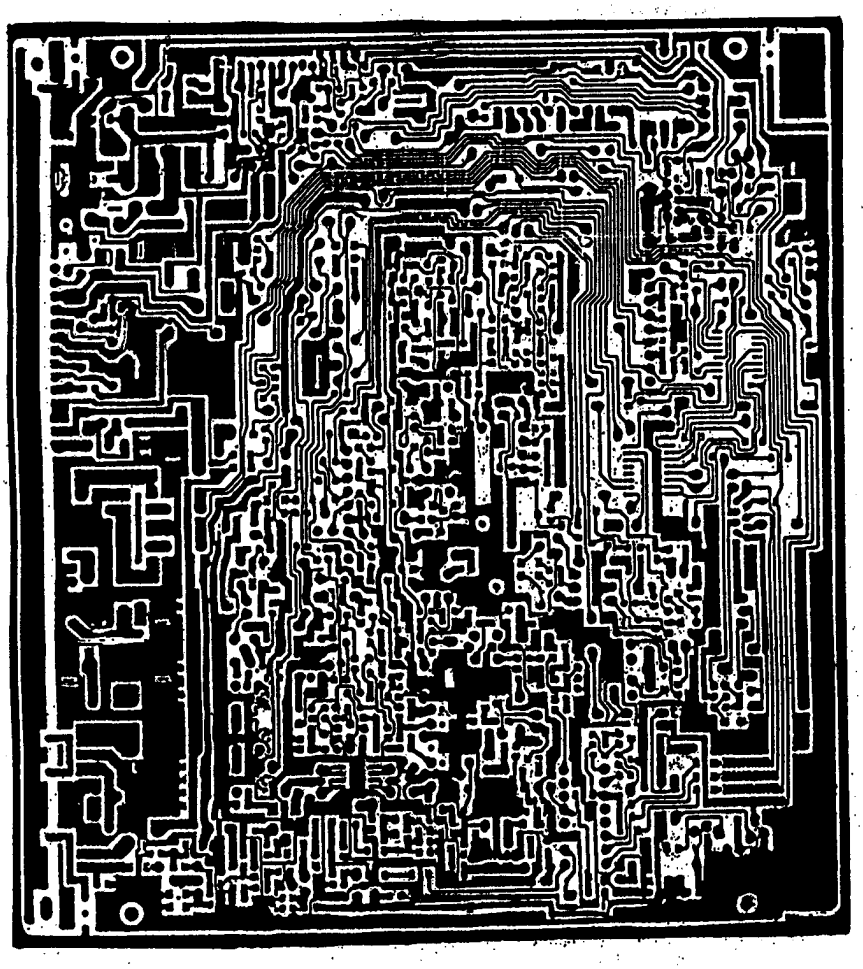

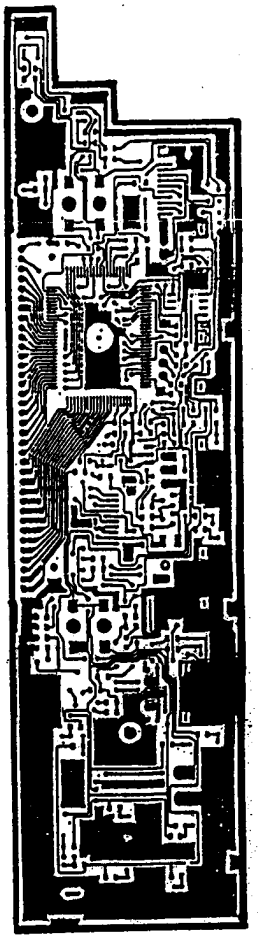

13A

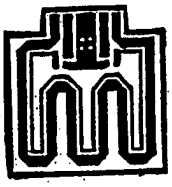

13A

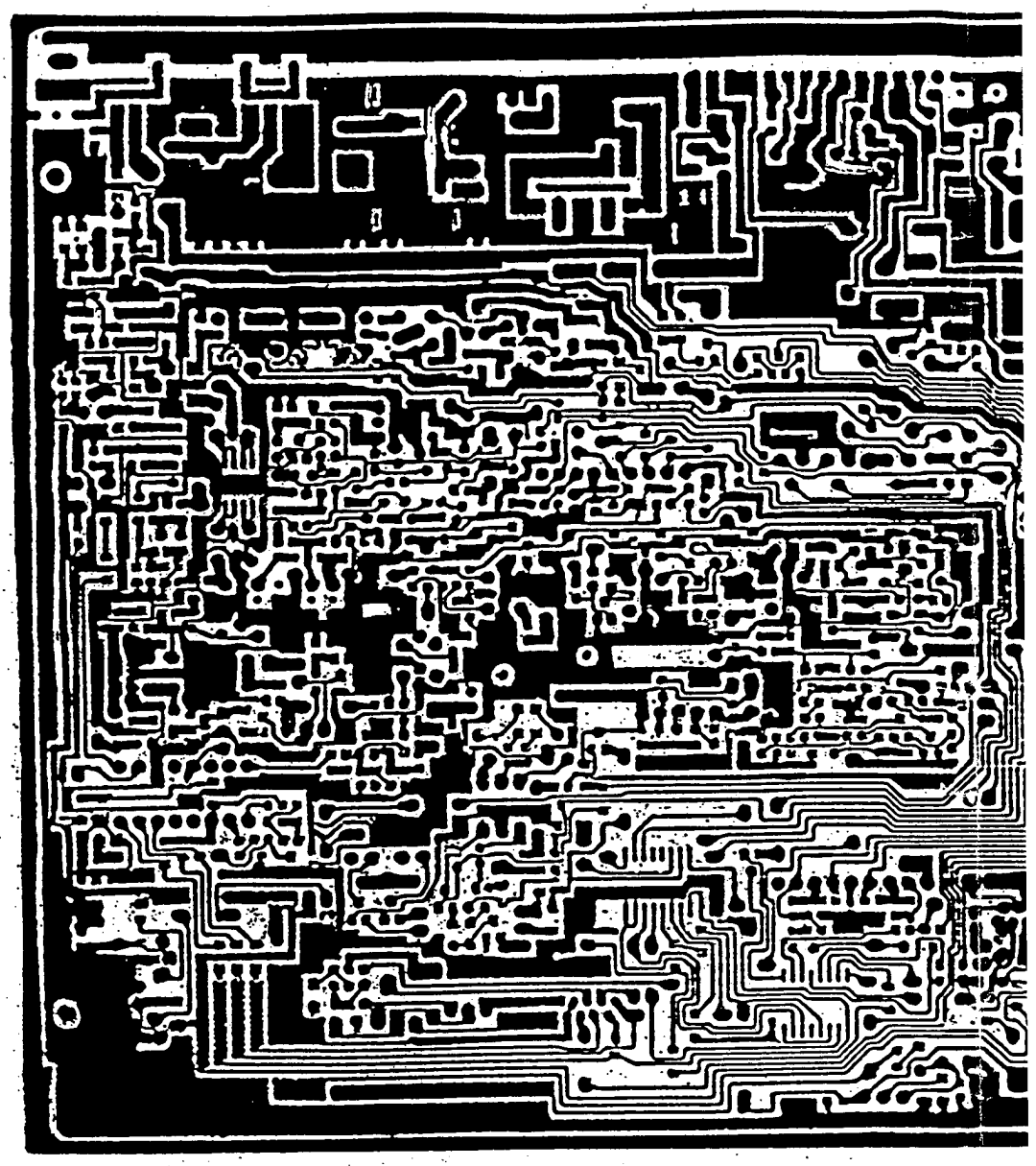

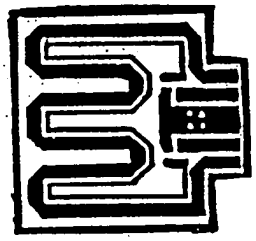

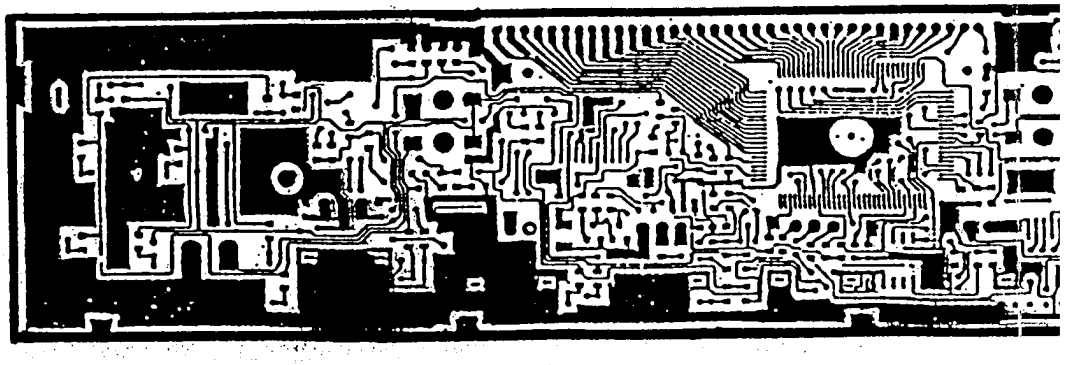

13B

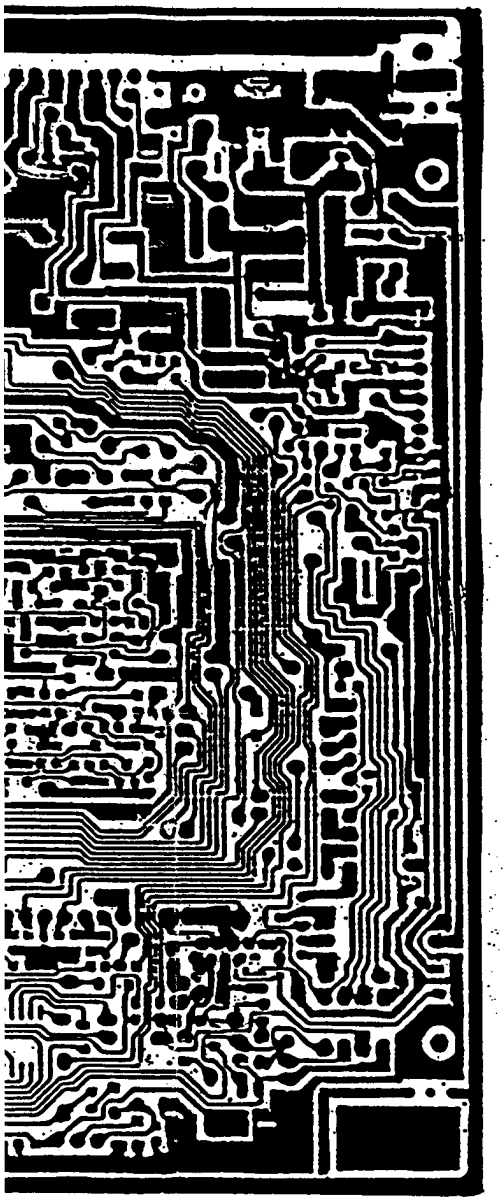

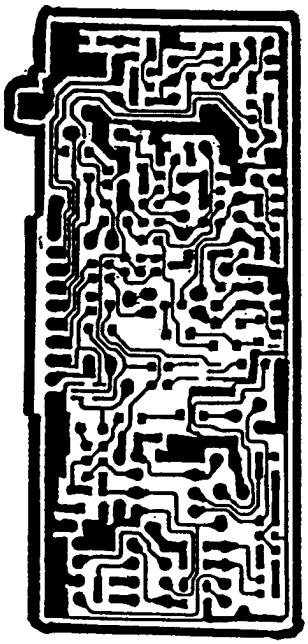

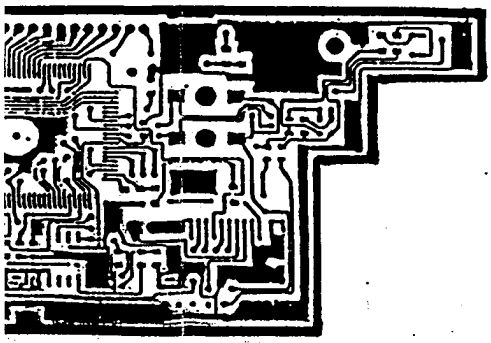

OSCILLOGRAMS

Q 401 - AM without modulation - in TX channel 20

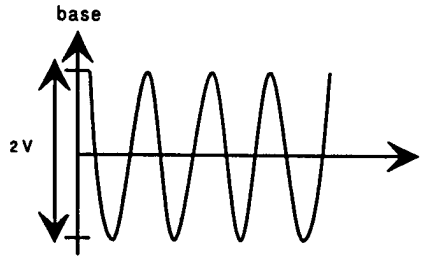

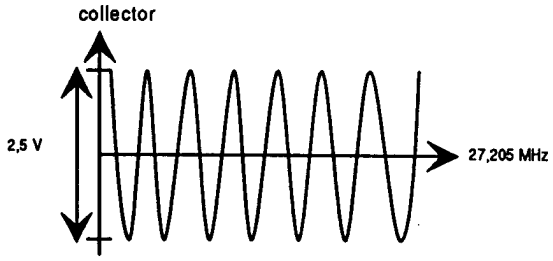

Q 401 - AM without modulation - RX

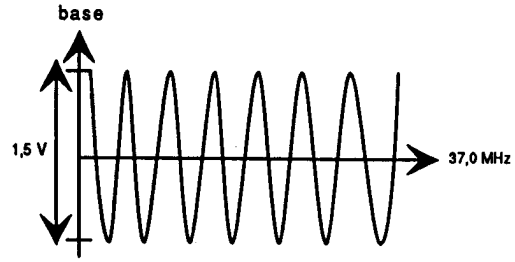

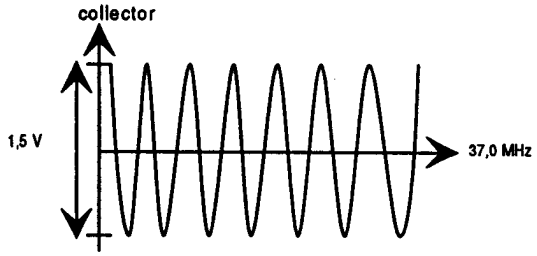

Q 201 - AM without modulation - in TX channel 20

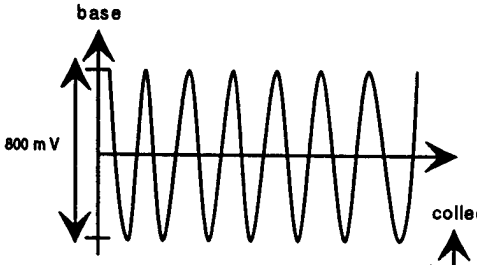

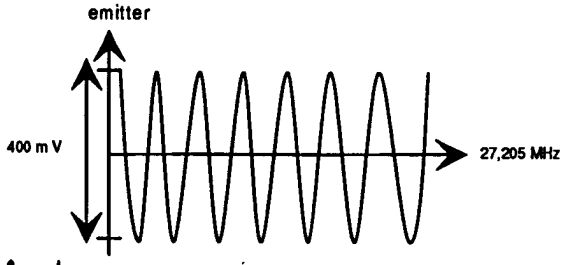

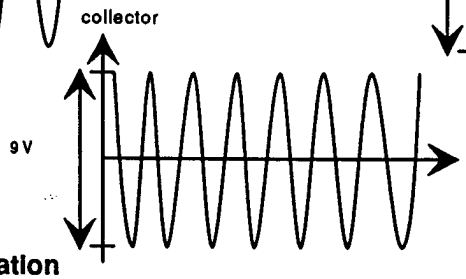

Q 502 - AM without modulation

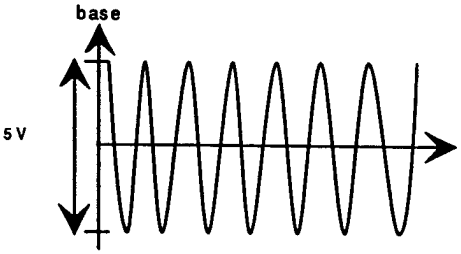

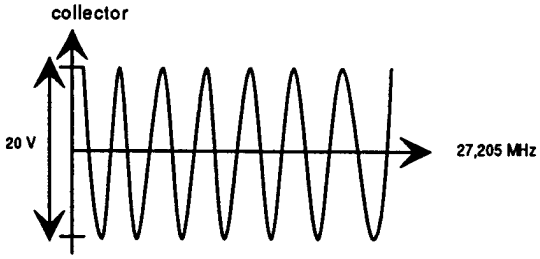

Collector of Q 502 coil output L 26 - 1000 Hz in modulation

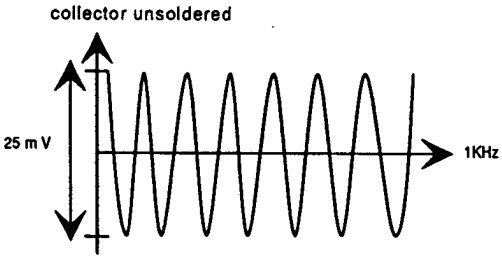

INTEGRATED CIRCUIT VOLTAGES

IR3N06 - MOD. FM.RX

PINS	
1	NC
2	NC
3	NC
4	8 V
5	1 V
6	1 V
7	1 V
8	8 V
9	4,40 V
10	-
11	-
12	-
13	-
14	-
15	0 V
16	-

IC2NJM2904

	SQUELCH ON	SQUELCH OFF
1	8 V	8 V
2	6,71 V	0 V
3	0,362 V	0,362 V
4	3,8 V	0 V
5	0 V	0 V
6	0 V	0 V
7	0 V	0 V
8	0 V	0 V
9	NC	NC

	Name of the integrated circuits	Pins	Reception (V)	Emission (V)
IC201	MB3735	1	3,3	3,3
		2	3,3	3,3
		3	3,4	3,4
		4	0	0
		5	6,7	6,7
		6	12,1	11,7
		7	13,1	12,8
		8	6,6	6,35
		9	12	1,75

LA 4485 - BF

	Reception	Emission
1	6,82 V	-0,163 V
2	0	0
3	6,82 V	-0,126 V
4	0	2,342 V
5	1,014 V	0,745 V
6	13,2 V	13,2 V
7	13,2 V	13,2 V
8	6,53 V	0
9	(NC)	(NC)
10	0,7 V	0
11	0	0
12	1,27 V	0,5 V
13	1,27 V	0,3 V

VOLTAGE OF THE PLL
2002

1	2,6 V
2	5,25 V
3	0 V
4	NC
5	5,28 V
6	0 V
7	2,874 V
8	2,806 V
9	5,26 V
10	5,28 V
11	5,27 V
12	0 V
13	0 V
14	0,6 V
15	0,603 V
16	0,609 V

FM output of the mike/echo PCB10mV 1 KHz

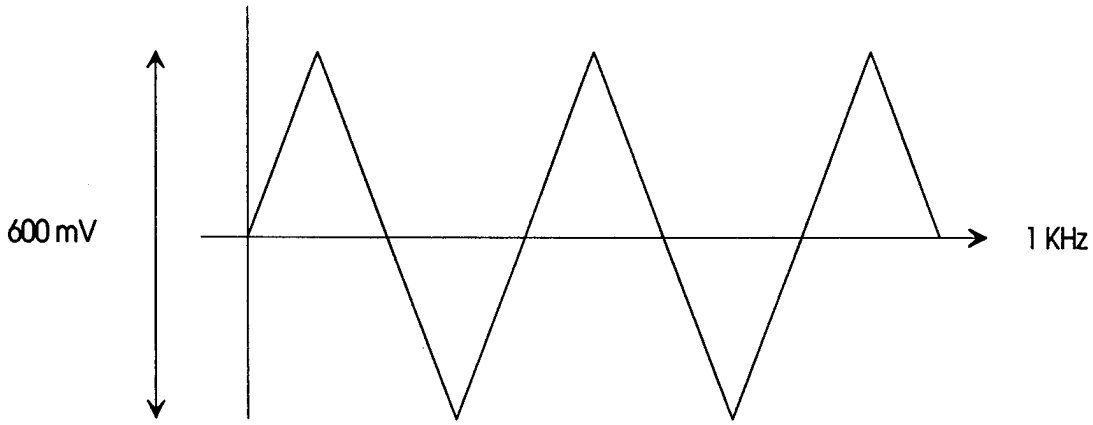

IC 601

	ECHO ON	ECHO OFF
1	4,3 V	0 V
2	4,3 V	320 mV
3	0 V	0 V
4	8 V	0 V
5	8 V	0 V

IC 602

	ECHO ON	ECHO OFF
1	4,3 V	4,3 V
2	0 V	4,17 V
3	0 V	0 V
4	0 V	8 V
5	8 V	8 V

Q 425

Lamp strongly lit

e	b	c
13 V	10 V	10,63 V

Lamp weakly lit

e	b	c
13 V	7,41 V	10,63 V

Q 423

Lamp strongly lit

e	b	c
13 V	7,46 V	8,0 V

Lamp weakly lit

e	b	c
13 V	7,41 V	10,63 V

Q 121

	e	b	c
OFF	13,30 V	12,92 V	0
ON	13,30 V	12,4 V	13,12 V

Q 413

	e	b	c
RX	13 V	12,7 V	0,8 V
TX	13 V	12 V	11 V

DIODES - TRANSISTORS - INTEGRATED CIRCUITS

* PIN DIAGRAMS OF DIODES

* PIN DIAGRAMS OF TRANSISTORS

* PIN DIAGRAMS OF CIRCUITS INTEGRES

PIN DIAGRAM OF SEMI-CONDUCTORS

DIODES

HSK120TR
HSK110TR

HZK3CLL01 TR

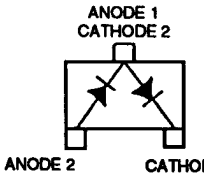

HSM88ASTL

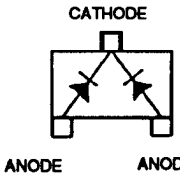

1SS184

1N4003
HRP22

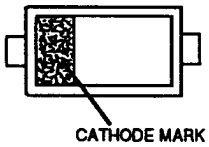

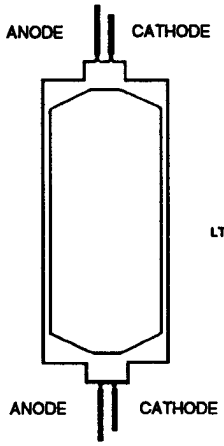

LT931SE

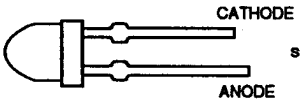

SLP-1358

TRANSISTOR

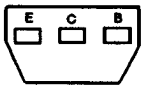

2SD1676
2SC2668-O

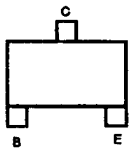

2SA1162-Y
2SB815-866YDK
2SC3704
2SC3121
2SC2812-L5
2SC2714-O
RT1N141C-T12-1
RT1P144C-T12-1

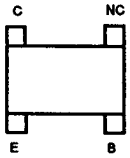

2SD1777CI-TR

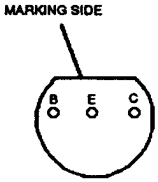

2SC3128

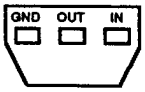

DTA143XS

DTA 114 TK

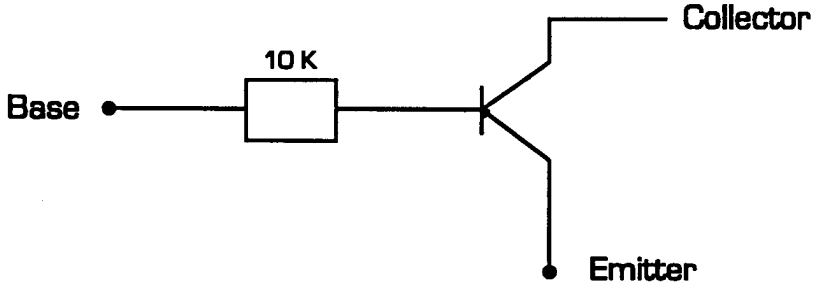

DTA 143 XK

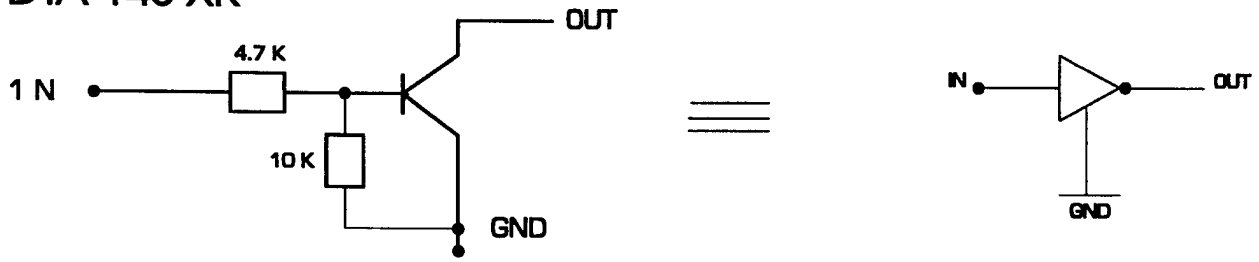

DTA 144 EK

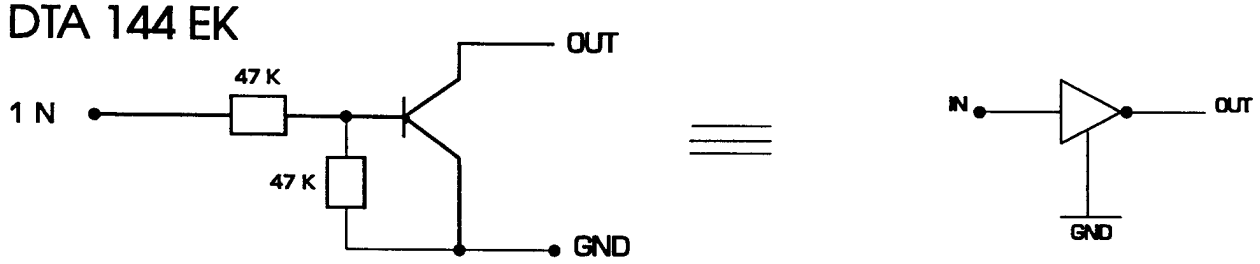

PIN DIAGRAM - INTERNAL SYNOPTICS - INTEGRATED CIRCUITS

PLL2002A1 IC 401

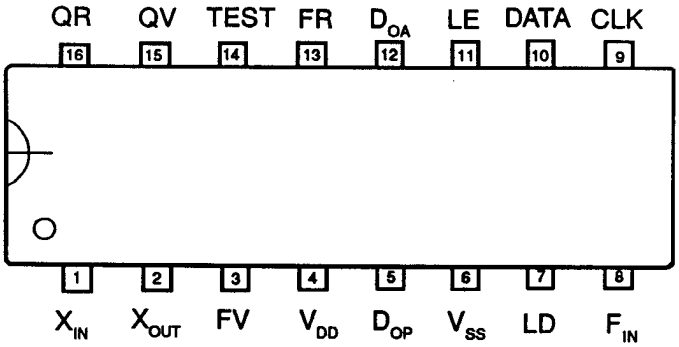

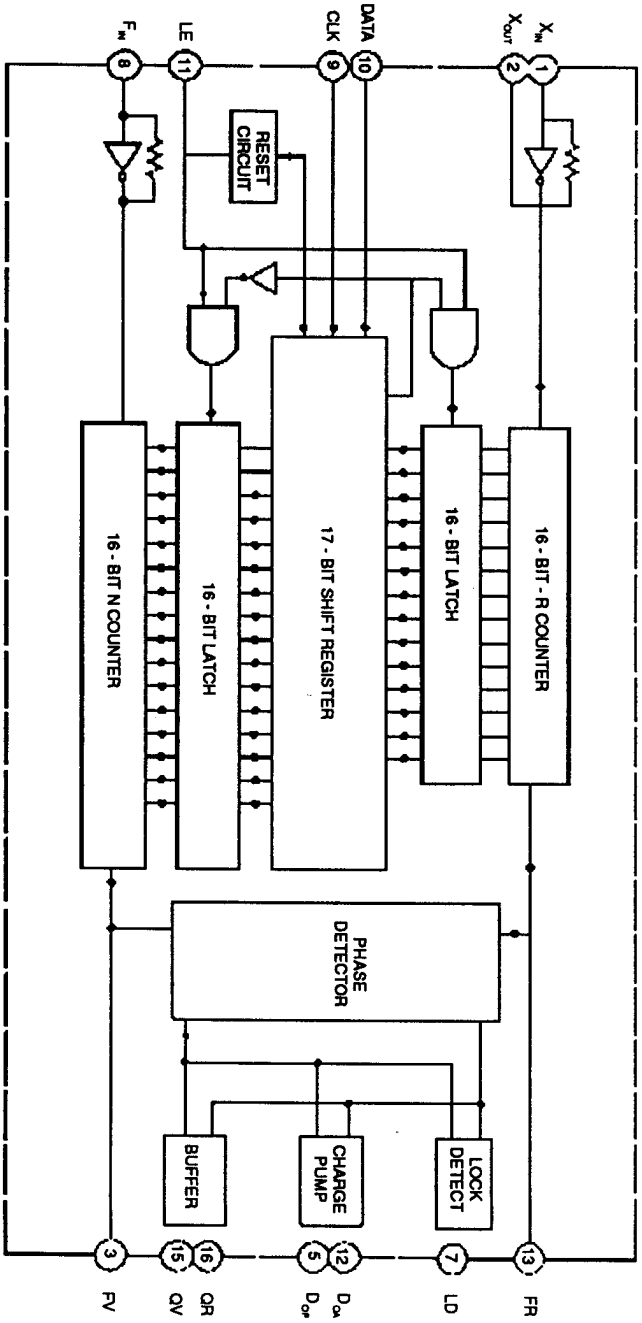

93C46 IC 703

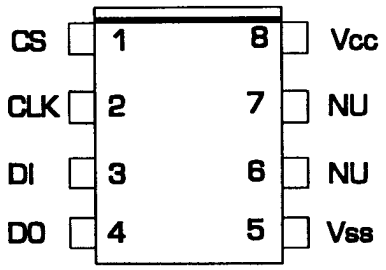

UC 1520 IC 701

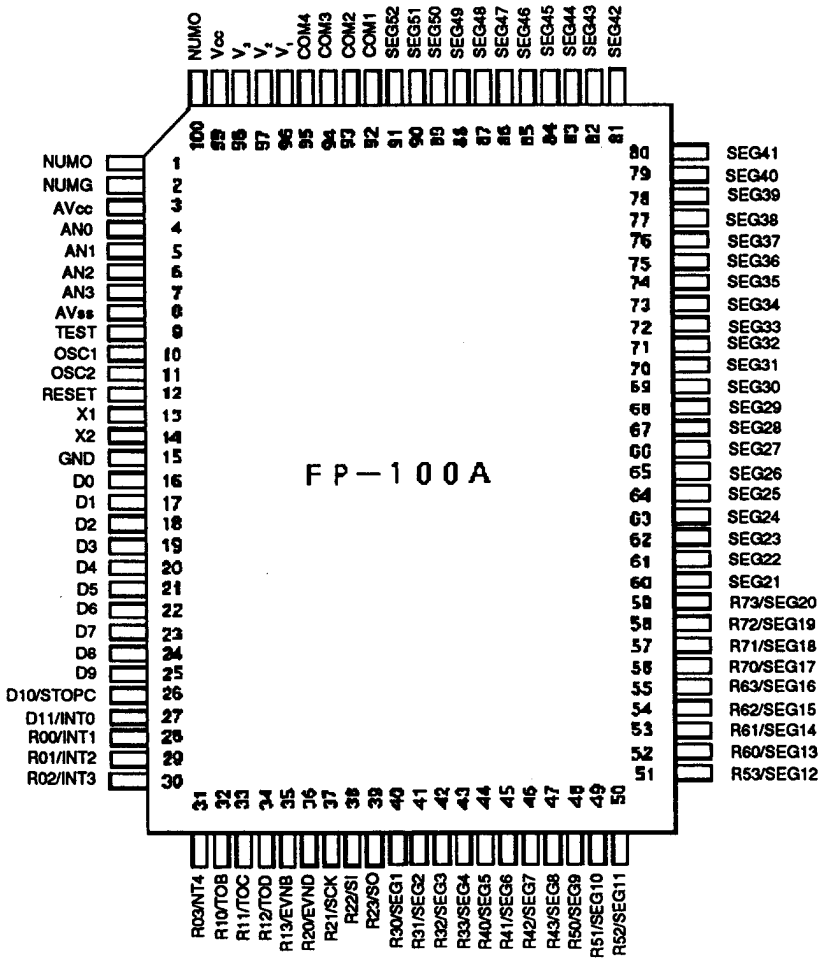

54995F IC 405 IC 406

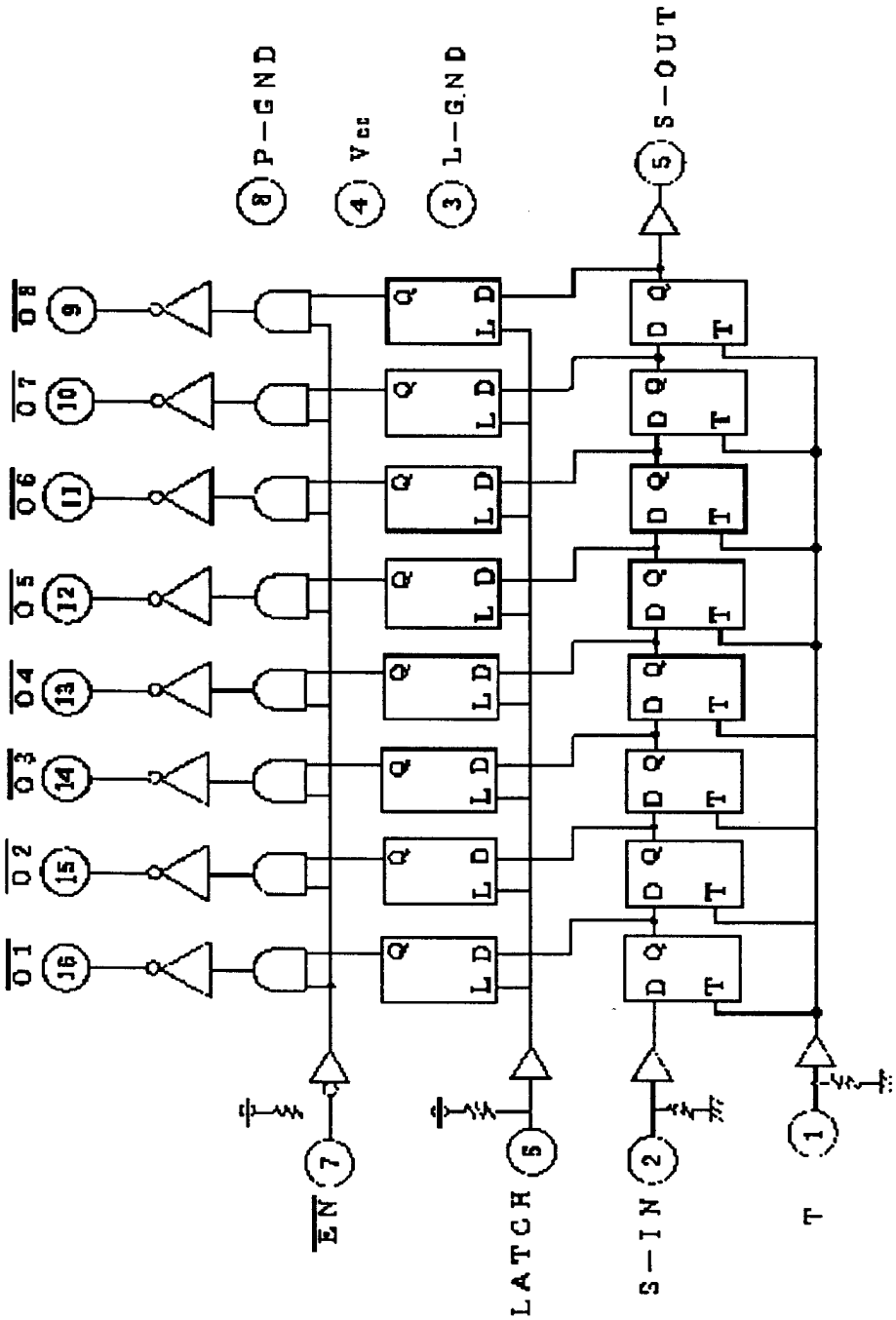

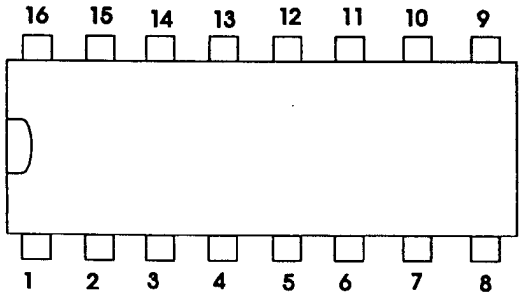

IC 1 IR3N06

IR3N06

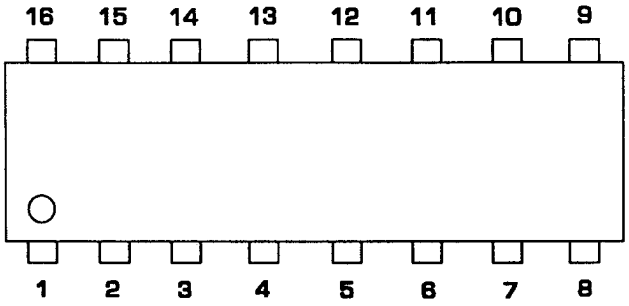

1	Crystal OSC.	9	Demodulator Output
2		10	Filter Input
3	Mixer Output	11	Filter Output
4	Vcc	12	Squelch Input
5	Limiter Input	13	Scan Control
6	Decoupling	14	Audio Mute
7	Limiter Output	15	GND
8	Quad Input	16	RF Input

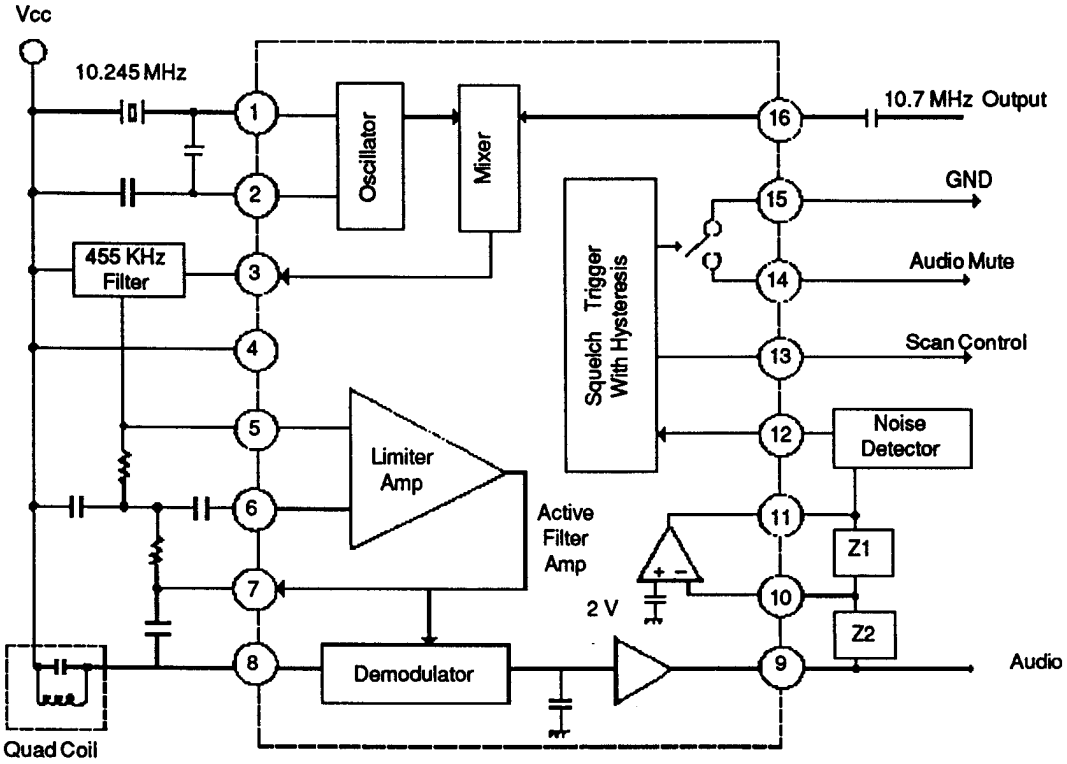

PLATINE MIC ECHO

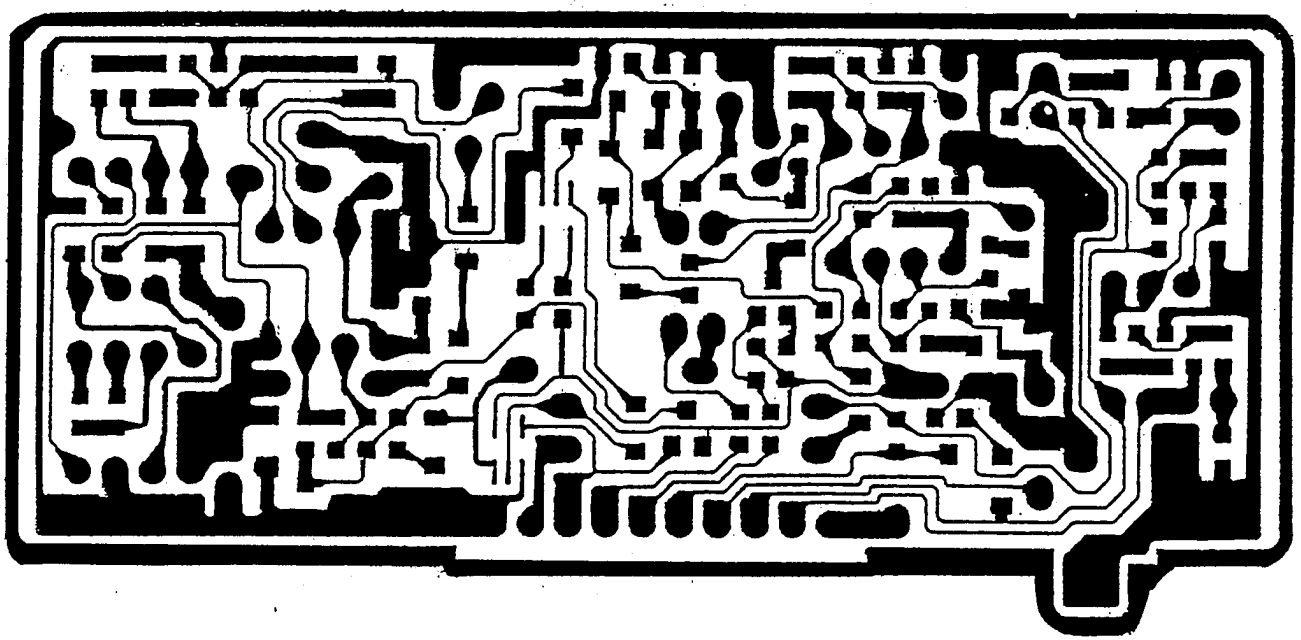

MIKE ECHO P.C.B.
Soldered side

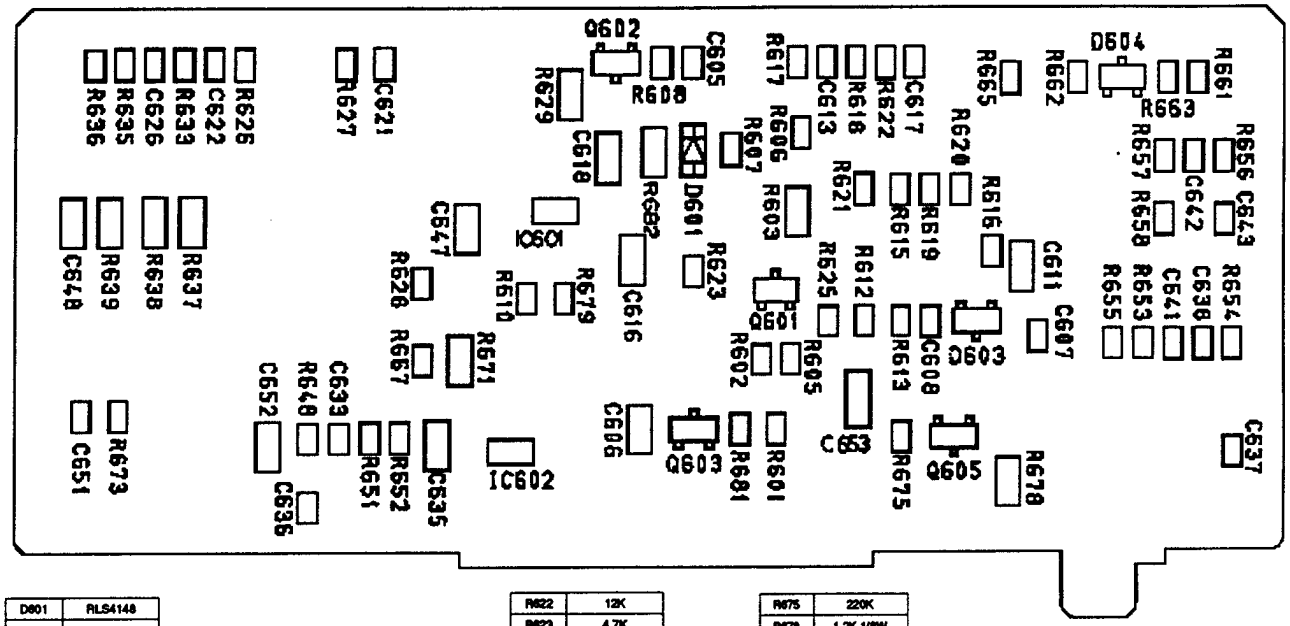

C605	0.1/C
C606	1/Z F
C607	0.1/C
C608	0.1/C
C611	1/Z F
C613	470P/CG
C616	0.22/Z F
C617	0.001/C
C618	0.22/Z F
C621	220P/CG
C622	0.0033/C
C626	0.1/C
C633	220P/CG
C635	0.22/Z F
C636	0.0033/C
C637	0.0027/C
C638	0.033/C
C641	0.0068/C
C641	0.047/C
C642	0.0012/C
C643	0.0012/C
C647	0.1/C
C648	0.1/C
C651	180P/CG
C652	0.047/C
C653	0.22/F
IC601	TC4S66F
IC602	TC4S66F

D601	RLS4148
D603	1SS226
D604	HSM88WA
Q601	2SA1179-M6
Q602	2SD1048-X6
Q603	DTA144EK
Q605	2SC2812-L5
R601	470
R602	22K
R603	RZ-029
R605	470
R606	120
R607	4.7K
R608	15K
R610	10K
R612	100
R613	820K
R615	47K
R616	100
R617	470K
R618	100
R619	10K
R620	10K
R621	10K

R622	12K
R623	4.7K
R625	4.7K
R626	56K
R627	33K
R628	12K
R629	RZ-029
R633	47K
R635	5.6K
R636	5.6K
R637	100K 1/8W
R638	100K 1/8W
R639	RZ-029
R648	39k
R651	47k
R652	39K
R653	8.2K
R654	8.2K
R655	8.2K
R656	8.2K
R657	8.2K
R658	47K
R661	47K
R662	15K
R663	680
R665	680
R667	10K
R671	120K 1/8W
R673	220K

R675	220K
R678	1.2K 1/8W
R679	RZ-035
R681	RZ-035
R682	RZ-029

MIKE ECHO P.C.B.
Componants side

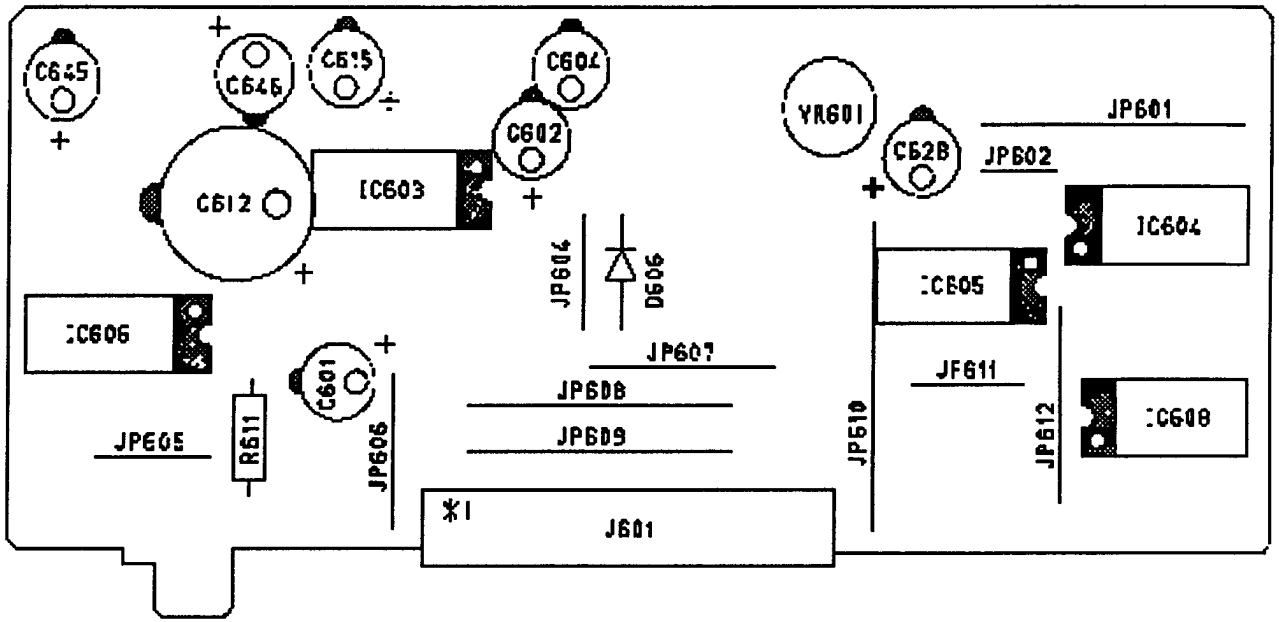

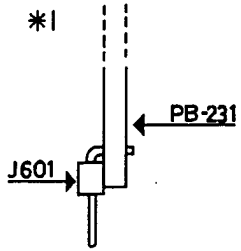

C601	50V10 C-130
C602	50V22 C-130
C604	50V2.2 C-130
C612	10V1000 C-130
C615	50V1 C-130
C628	50V4.7 C-130
C645	50V2.2 C-130
C646	50V2.2 C-130
VR601	RT-528 22KB
R611	1K

C601	50V10 C-130
C602	50V22 C-130
C604	50V2.2 C-130
C612	10V1000 C-130
C615	50V1 C-130
C628	50V4.7 C-130
C645	50V2.2 C-130
C646	50V2.2 C-130
VR601	RT-528 22KB
R611	1K

IC603	50V10 C-130
IC604	50V22 C-130
IC605	50V2.2 C-130
IC606	10V1000 C-130
IC608	50V1 C-130
J601	JK-727 10P

NOTES :
1. RESISTANCES VALUES ARE SHOWN IN OHMS UNLESS OTHERWISE NOTED.
2. RESISTOR WATTAGES ARE 1/6 W UNLESS OTHERWISE NOTED.
3. CAPACITANCE VALUES ARE INDICATED IN MICRO FARADS UNLESS OTHERWISE NOTED.
(P=MICRO-MICRO FARAD)

TOS-METER PCB

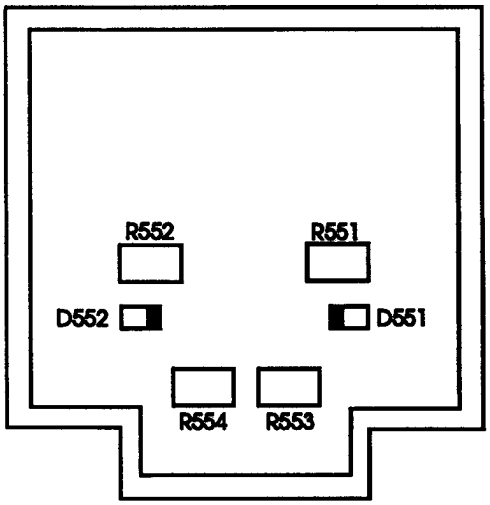

R551	82 1/10 W
R552	68 1/10 W
R554	4,7 M 1/10 W
R553	4,7 M 1/10 W

D551	MA728 TX
D552	MA728 TX

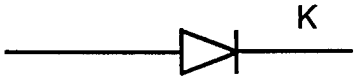

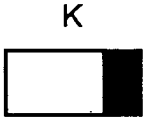
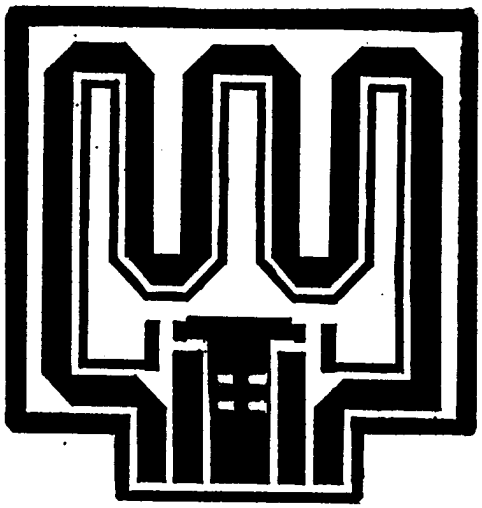
PLATINE TOS-MÈTRE